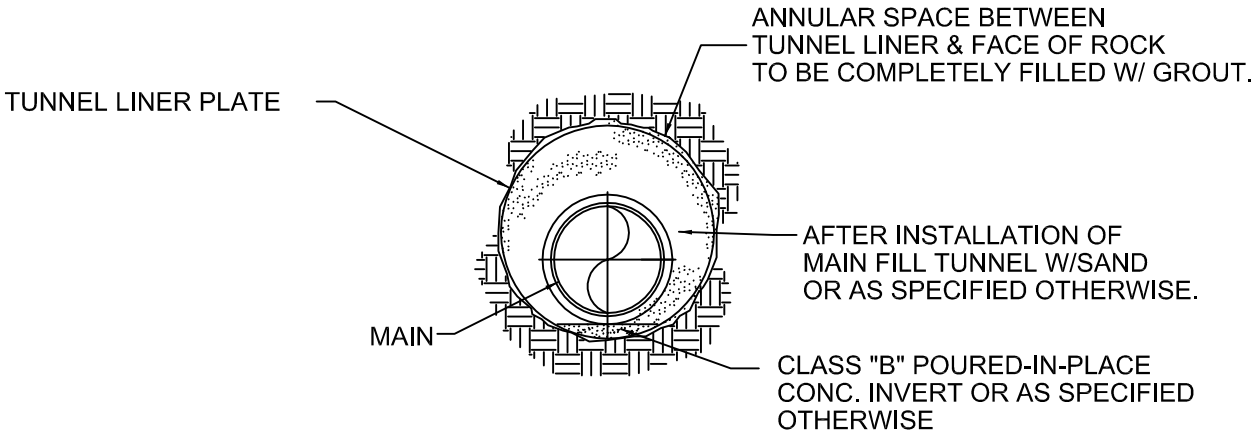

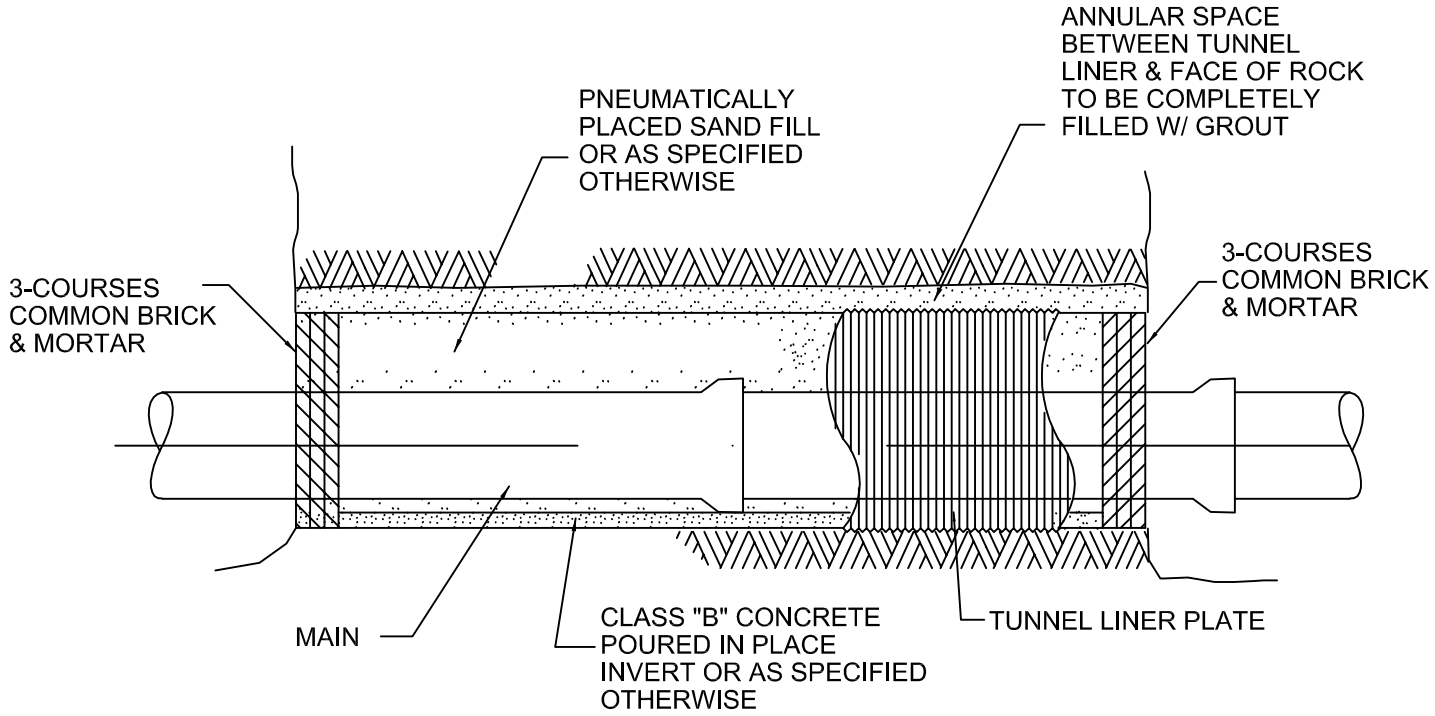

DRAWING NOT TO SCALE

AUGUST 1, 1999

DRAWN BY: KMC
APPROVED BY: VHS
DATE REVISED: 11/30/05 & 12/30/08

TUNNEL DETAIL

STANDARD
DRAWING NO.
S - 15

MURFREESBORO WATER & SEWER DEPARTMENT