HAZEN AND SAWYER
Environmental Engineers & Scientists

To:
Murfreesboro Water and Sewer Department
City of Murfreesboro

Copies:
Gary Haubner
Scott Woodard

Hazen and Sawyer, P.C.
3200 West End Avenue
Suite 500
Nashville, TN 37203
615-783-1515
Fax: 615-783-1606

Firm License No.: TN6042

From:
Hazen and Sawyer Project Team

Date:
March 11, 2011

Project No.:
50006-000-001

Subject:
**Technical Memorandum 3 – Evaluation of Treatment Technologies**
Wastewater Treatment Capacity and Effluent Disposal Study
Murfreesboro Water and Sewer Department

The purpose of this technical memorandum (TM) is to provide a summary of several advanced treatment technologies that are available for the expansion of the Sinking Creek Wastewater Treatment Plant (SCWWTP) in Murfreesboro, Tennessee, or for the construction of decentralized or satellite treatment facilities. The technologies summarized in this TM are: extended aeration oxidation ditches, plug flow conventional activated sludge reactors, membrane bioreactors, integrated fixed-film activated sludge, moving bed biological reactors, and sequencing batch reactors. General process descriptions, applications, advantages and disadvantages, and design criteria are provided for each technology using pilot studies, previous research, and the State of Tennessee Department of Health and Environment (TDEC) as references, where applicable. Additionally, brief descriptions of regulatory constraints, side stream wet weather peak flow treatment, and biosolids treatment and disposal are also included in this TM.

The treatment technologies presented in this TM provide a wide and overlapping range of effluent quality. The results provided in this TM indicate that there are several factors to consider during the selection of a treatment technology for a particular application: a plant's influent characteristics, the effluent limits specified in the permit, the treatment reliability and redundancy required to consistently achieve permit limits, flexibility and adaptability of the system, operability, energy efficiency, capital costs, operation and maintenance costs, the potential for future regulatory action, and physical constraints (size of facility, land availability, etc.). Extended aeration oxidation ditches, plug-flow conventional activated sludge for advanced nutrient removal, submerged membrane bioreactors, integrated fixed-film activated sludge, moving bed biological reactors, and sequencing batch reactors are technologies that have been used for both surface water discharges and reclaimed water use applications in the United States.

Inherent with each technology are advantages and disadvantages to the process and/or operation and maintenance. Effluent requirements are usually the primary factor in the selection of a treatment technology; however, more than one treatment technology could be applicable to a particular situation. In

this case, capital and operation and maintenance costs should be factored into the selection of a treatment process or technology. Additionally, other non-monetary factors should also be considered, such as process flexibility and ancillary treatment needs (e.g., influent equalization).

The capital required to construct a project depends on several factors, including redundancy in equipment, process flexibility, the number of buildings, architectural design, and owner preference. The results of the capital and operating cost comparison in this TM indicate that membrane bioreactors with advanced biological nutrient removal are generally associated with the highest construction costs per gallon when compared to other technologies. Construction costs are generally less for activated sludge systems with advanced biological nutrient removal processes, followed by activated sludge with nitrification.

## Table of Contents

**1. Technology Evaluation Criteria 8**

1.1 Regulatory Considerations 8

1.2 Nutrient Removal 10

1.3 Treatment Reliability 10

1.4 Emerging Contaminants 11

1.5 Applicability for Expansion and/or Decentralization 13

**2. Extended Aeration Oxidation Ditches 14**

2.1 General Description and Applications 14

2.2 Operation 14

2.3 Nutrient Removal Performance 14

2.4 Design Criteria 15

2.5 Summary of Advantages and Disadvantages 15

**3. Plug Flow Conventional Activated Sludge for Advanced Nutrient Removal 17**

3.1 General Description 17

3.2 Design Criteria 23

3.3 Summary of Advantages and Disadvantages of Conventional Activated Sludge 23

**4. Submerged Membrane Bioreactors 24**

4.1 General Description 24

4.2 Hollow Fiber versus Flat Sheet 27

4.3 Design and Operational Considerations 28

4.4 Summary of Advantages and Disadvantages of Submerged Membrane Bioreactors 32

**5. Integrated Fixed-Film Activated Sludge (IFAS) 33**

5.1 General Description and Applications 33

5.2 Terminology 34

5.3 Fixed versus Free-Floating Media 35

5.4 Operation 35

5.5 Description of Pilot Studies 36
5.6 Nitrification / Denitrification Performance 37
5.7 Phosphorus Removal Performance 38
5.8 Operational Challenges 38
5.9 Summary of Advantages and Disadvantages of IFAS Systems 39

**6. Moving Bed Biological Reactors 40**
6.1 General Description and Applications 40
6.2 Operation 41
6.3 Summary of Pilot Studies 41
6.4 General Design 42
6.5 Summary of Advantages and Disadvantages of MBBRs 43

**7. Sequencing Batch Reactors 44**
7.1 General Description and Applications 44
7.2 Operation 44
7.3 Nutrient Removal Performance 45
7.4 Design Criteria 46
7.5 Summary of Advantages and Disadvantages of SBRs 46
7.6 SBR-MBR Systems 47

**8. Sidestream Treatment of Plant Recycle Flow 50**
8.1 Filtrate Equalization 50
8.2 Physical-Chemical Treatment 50
8.3 Biological Treatment 51
8.4 CASTion Ammonia Recovery Process 53
8.5 OSTARA Process 54
8.6 Overview of Combined Sewer Overflows 55
8.7 Inflow Control 55
8.8 Green Infrastructure 56
8.9 Storage and Conveyance 57

**9. Biosolids Treatment and Disposal 58**

9.1 Murfreesboro Biosolids Treatment and Disposal 58

9.2 Class A and Class B Biosolids 58

9.3 Biosolids Disposal Options 59

9.4 Moisture Content Reduction Processes 60

9.5 Stabilization Processes 62

**10. Summary of Treatment Technology Evaluation 67**

**11. Opinion of Probable Capital and Operating Costs 69**

**12. References 72**

## Tables

Table 1-1: Summary of NPDES Permit Limitations 9

Table 2-1: Summary of Advantages and Disadvantages of Oxidation Ditches 16

Table 3-1: Summary of Expected Effluent Total Nitrogen and Phosphorus Concentrations for Different Conventional Plug Flow Activated Sludge Processes 19

Table 3-2: Summary of Advantages and Disadvantages of Conventional Activated Sludge 23

Table 4-1: Typical Effluent Quality of MBRs 26

Table 4-2: Summary of Differences between Hollow Fiber and Flat Sheet MBR Systems 28

Table 4-3: Summary of Cleaning Operations for Organic, Inorganic, and Mechanical Fouling 31

Table 4-4: Summary of Advantages and Disadvantages of Submerged Membrane Bioreactors Compared to a Conventional Activated Sludge System 32

Table 5-1: Summary of Initial Design Parameters in Full-Scale Pilot Study 37

Table 5-2: Summary of Nitrogen Species in IFAS Demonstration Plant Effluent 37

Table 5-3: Summary of Phosphorus Species in IFAS Demonstration Plant Effluent 38

Table 5-4: Summary of Advantages and Disadvantages of IFAS Systems 39

Table 6-1: Typical Design Values for the Kaldnes MBBR Process at 15°C 42

Table 6-2: Summary of Advantages and Disadvantages of MBBRs 43

Table 7-1: Summary of Expected Effluent Total Nitrogen and Phosphorus Concentration for Sequencing Batch Reactors 45

Table 7-2: Summary of Advantages and Disadvantages of Sequencing Batch Reactors 46

Table 7-3: Performance Parameters and Design Criteria of Batch and Continuous Flow Processes 47

Table 7-4: Summary of Differences Between Membrane Continuous Flow and Batch Processes 48

Table 9-1: Summary of Technology-Based and Water Quality-Based Wet Weather Control Methods 55

Table 10-1: Pathogen Treatment Processes 58

Table 10-2: Class A and B Requirements for Pathogen Reduction 59

Table 10-3: Pollutant Limits for Land Application 60

Table 10-4: Advantages and Disadvantages in Aerated Composting to Other Solids Handling Processes 64

Table 11-1: Summary of Operation and Process Issues of Evaluated Technologies 68

## Figures

Figure 3-1: Process Flow Diagrams for Conventional Activated Sludge with Advanced Biological Nitrogen and Phosphorus Removal 20

Figure 4-1: Illustration of the Membrane Bioreactor System Process 25

Figure 4-2: Example of a Flat Sheet Type Membrane 27

Figure 4-3: Example of a Hollow Fiber Type Membrane 27

Figure 5-1: Illustration of the Integrated Fixed-film Activated Sludge (IFAS) Process 34

Figure 5-2: Illustration of an IFAS Plastic Carrier Element 35

Figure 5-3: IFAS Pilot Plant at T.Z. Osborne Water Reclamation Facility 36

Figure 6-1: Schematic of the Moving Bed Bioreactor (MBBR) Process 40

Figure 6-2: Aeration Grid for an MBBR System 41

Figure 6-3: Typical Density of Media Within an MBBR Reactor 41

Figure 6-4: MBBR Nitrification Process in Operation 41

Figure 7-1: Illustration of an SBR Process Flow Diagram for Nitrogen and Phosphorus Removal 44

Figure 7-2: Illustration of the SMBR Process and Operation 49

Figure 12-1: Opinion of Probable Construction Cost ($/gal) for Wastewater Treatment Technologies in Varying Size Ranges 70

Figure 12-2: Estimate of Facility Power Cost per Million Gallons Treated for Wastewater Treatment Technologies 71

## 1. Technology Evaluation Criteria

The evaluation of wastewater treatment technologies for a particular application is highly dependent on the plant's influent characteristics and the required effluent limit specified by the permit. Surface water discharge requirements are highly dependent on the receiving stream characteristics; however, typical discharge requirements include removal of biochemical oxygen demand (BOD), ammonia, total nitrogen, and phosphorus. Reclaimed water effluent disposal requirements are stringent for BOD reduction, nitrification, disinfection, total suspended solids, turbidity, and residual chlorine.

This section provides the framework for this treatment technology evaluation. Regulatory requirements for direct discharge and reclaimed water effluent disposal methods are described in the following subsections. Nutrient removal and treatment reliability are critical factors in any treatment design process. Emerging contaminants (also termed microconstituents or trace organics) are a future regulatory concern for wastewater treatment plants. Finally, a technology evaluation must consider the applicability of expansion and/or decentralization.

### 1.1 Regulatory Considerations

The City of Murfreesboro owns and operates the Sinking Creek Wastewater Treatment Plant (SCWWTP). The plant has a design capacity of 16 mgd that discharges from an outfall on the West Fork of the Stones River (Outfall #001) per National Pollutant Discharge Elimination System (NPDES) permit TN0022586. The plant has a total nitrogen limit of 9 mg/l and a monthly total phosphorus (TP) reporting requirement. The permit also contains stringent summer and winter ammonia-nitrogen requirements. Final *E. coli* group levels must not exceed 126 cfu per 100 ml as the geometric mean of samples collected within the required reporting period. Monitoring requirements in the permit require influent and effluent sampling with varying frequency. Once a day sampling is required for most of the constituents while total nitrogen and total phosphorus require twice a month sampling. Table 1-1 provides a summary of effluent limits contained in the NPDES permit.

The NPDES permit allows treated wastewater effluent to be reused for land application by industrial customers, commercial developments, golf courses, recreational areas, and residential developments. The reuse water must undergo the same treatment processes as the discharged water and must comply with both effluent limitations of the discharged wastewater and additional *E. coli* and total residual chlorine limitations. The daily maximum *E. coli* concentration for reclaimed water is limited to 23 colonies per 100 ml with a monitoring frequency requirement of once a day. Total residual chlorine has a daily minimum of 1.0 mg/l leaving a facility and must also be measured at least once a day. Reuse water must comply with all effluent limits applied to the permitted surface water discharge.

Reuse water is restricted to land application via spray irrigation or drip irrigation, as stated in the SCWWTP NPDES permit. However, a reclaimed water system can be difficult to operate or in-operable during wet or frozen conditions. The reclaimed water application rate is not limited as long as runoff or ponding of reclaimed water to any surface or subsurface stream does not occur. The application rate must

also prevent groundwater from exceeding State groundwater criteria for nitrate year round. One of the requirements for dedicated irrigation sites is that they are owned by the permittee or covered by an easement for use as a land application site. TDEC must also approve of the land application site before it may be used for irrigation purposes.

Using the most recent draft version of the 2010 303(d) list, the Total Maximum Daily Load (TMDL) development and stream impairment status may be used to help gauge the future possibility of more stringent nutrient effluent limits. The 303(d) list indicates that the stream segment of the West Fork of the Stones River at Outfall #001 is impaired due to nitrates and nitrites, total phosphorus, and siltation. The TMDL development priorities for this specific stream segment have changed from high to medium and low, indicating that it will take approximately 5 to 12 years to develop TMDLs in the associated stream segment. Refer to TM #2 – *Regulatory Analysis* for a detailed explanation of the effluent disposal issues in the county.

**Table 1-1: Summary of NPDES Permit Limitations**

| Effluent Characteristics [1] | Monthly Average Conc. (mg/l) | Monthly Average Amount (lb/day) | Weekly Average Conc. (mg/l) | Weekly Average Amount (lb/day) | Daily Maximum Conc. (mg/l) | Daily Minimum Percent Removal |
|---|---|---|---|---|---|---|
| $CBOD_5$ (May 1 – Oct.31) | 5 | 667 | 7.5 | 1,001 | 10 | 40 |
| $CBOD_5$ (Nov. 1 – April 30) | 10 | 1,334 | 15 | 2,002 | 20 | 40 |
| Ammonia as N (May 1 – Oct.31) | 1 | 133 | 1.5 | 200 | 2 | - |
| Ammonia as N (Nov. 1 – April 30) | 2.2 | 294 | 3.3 | 440 | 4.4 | - |
| Total Nitrogen [2] | 9.0 | 1,201 | - | - | | - |
| Total Phosphorus [3] | Report | - | - | - | - | - |
| Suspended Solids | 30 | 4,003 | 40 | 5,338 | 45 | 40 |
| *E. coli* [4], cfu/100 ml | 126 | - | - | - | 941 | - |
| Dissolved oxygen, instantaneous | 6.0 mg/l | - | - | - | - | - |
| pH (Standard Units) | 6 | - | - | - | 9 | - |

*[1] $IC_{25}$ limitations are 99% and 74% effluent from May to October and from November to April, respectively. The $IC_{25}$ is the Inhibition Concentration causing 25% reduction in survival and growth of test organisms.*
*[2] No separate test required for Total Nitrogen. Sum of TKN and nitrite plus nitrate is limited to 9.0 mg/l.*
*[3] Several amendments to the previous permit addressed the absence of a phosphorus limit in the permit. Instead, it is to be monitored as a "Report" only parameter. The stream is effluent dominated. Limiting the nitrogen versus phosphorus continues to keep the N to P ratio less than 10:1, and thus postpones the engineering of any phosphorus removal process until the TMDL establishes a waste load allocation on which to base a design.*
*[4] Recently, EPA proposed a new method in 40 CFR, Part 136 for measuring E. coli in effluent matrices, Method #1603.*

## 1.2 Nutrient Removal

Biological nitrogen and phosphorus removal requires that an activated sludge process be designed to enhance the environment of the activated sludge to accomplish the biological uptake or conversion of nitrogen and phosphorus. Nitrogen and phosphorus removal in activated sludge requires the separation of anaerobic, anoxic, and aeration zones in the activated sludge process in conjunction with carefully controlled internal sludge recycles. Different activated sludge configurations will produce varying reliability of nitrogen and phosphorus removal efficiencies (refer to Section 3).

Untreated (raw) wastewater consists of un-oxidized forms of nitrogen, specifically organic nitrogen and ammonia nitrogen. Organic nitrogen is converted biologically during treatment to ammonia nitrogen via the ammonification process. Ammonia nitrogen is oxidized to nitrite and nitrate in the presence of oxygen, e.g., the nitrification process. The denitrification process converts nitrite/nitrate to nitrogen gas, which is released to the atmosphere. The denitrification process requires near zero dissolved oxygen (e.g., an anoxic environment) in activated sludge. Total nitrogen in the effluent is typically defined as the sum of organic nitrogen, nitrate nitrogen, and nitrite nitrogen.

The metabolic method for achieving biological phosphorus removal is very different from the metabolic processes required for total nitrogen removal. Biological phosphorus removal processes require conditions that enhance the amount of phosphorus released by microorganisms in an oxygen-free environment (e.g., anaerobic) along with an adequate supply of volatile fatty acids (VFAs). The released orthophosphate is then taken up and stored by microorganisms in an oxygen-rich environment. The ultimate removal of phosphorus from an activated sludge system requires the physical removal of microorganisms as waste activated sludge.

Phosphorus may also be removed chemically with aluminum or iron salts. Molar ratios of salt to phosphorus as phosphate are typically in the 1:2 to 1:4 range. The molar range depends on the chemical matrix of the wastewater and the required effluent limit. Typically, effluent permit limits of less than 0.3 mg/l total phosphorus require more chemical per unit phosphorus.

When both nitrogen and phosphorus removal is required, additional factors must be considered. Both nitrogen and phosphorus removal use aerobic, anoxic, and anaerobic environments, but have very different metabolic functions, process sequences, and different design and operating parameters. The biological process must be designed carefully to meet the needs of both systems.

## 1.3 Treatment Reliability

Treatment reliability is defined as the ability of an activated sludge process to meet the design permit limit on any given day of the year regardless of temperature, influent flow, influent load, or equipment failure. There are several different types of reliability, ranging from process design considerations to process equipment redundancy, the type and extent of which will depend on owner preference, influent flow and

load variability, the presence of influent equalization, and the type of NPDES permit limits (mass load or concentration limit). The types of treatment reliability are as follows:

- Process equipment redundancy (e.g., process blowers, pumps).
- Size of process units, such as secondary clarifiers and tertiary filters.
- Necessity and location of chemical addition.
- Use of ancillary processes, such as denitrification filters for nitrate polishing (e.g., multiple barrier approach).
- Configuration of multiple pipe and valve options to optimize and re-configure the activated sludge process, as needed.
- Use of swing zones in the activated sludge basin to create additional process flexibility.

The range of options that may be implemented to enhance treatment reliability will vary in capital and operation and maintenance (O&M) costs depending upon the option(s) selected. Furthermore, the type of NPDES permit limit will often drive the decision to implement one or more reliability options. An annual mass-based permit will allow treatment variability to be considered on an annual basis as long as a plant is in compliance with the total annual load. A concentration-based permit limit requires that a plant be in compliance with a fixed effluent limit. The value of a concentration-based limit will often determine the extent of reliability measures that are employed. For example, an effluent treatment goal of 3 mg/l of total nitrogen typically requires more process reliability than an effluent treatment goal of 6 mg/l total nitrogen.

## 1.4 Emerging Contaminants

The presence of trace organic contaminants, or emerging contaminants, is a growing concern in wastewater and drinking water processes as the occurrence, potential public health effects, and environmental impacts of these contaminants are being portrayed as a growing threat to water and wastewater providers. These issues surfaced in this country nearly 60 years ago, but have gained notoriety during the past two decades as analytical techniques have improved (and now broken the parts per quadrillion, or pg/l barrier). Consequently, the detection of trace organics has become nearly ubiquitous in surface water.

The emerging contaminant issue is complex and multi-faceted. The primary concern for municipalities is the effect that the presence of emerging contaminants will have on 1) the development of permit limits, 2) the likelihood of having to construct advanced technologies to meet a permit limit(s), 3) the cost of constructing advanced technology, and 4) public perception of the issue. The topics presented in this section are focused on advanced treatment technology options for trace contaminant removal.

There is no accepted or defined list of emerging contaminants. However, the broad subcategories include veterinary and human antibiotics, prescription drugs (e.g., codeine, anti-asthmatics, antacids), non-prescription drugs (e.g., acetaminophen, ibuprofen, caffeine), steroids and hormones (e.g., cholesterol,

synthetic and natural estrogenic compounds), and organic wastewater contaminants (e.g., plastics, pesticides, detergents, fragrances, antioxidants, antimicrobial disinfectants). Some of these chemicals have been recognized as endocrine disruptors (EDCs). Endocrine disruptors interfere with the function of the endocrine system, a system present in nearly all animals (including humans, fish, amphibians, birds, snails, crustaceans, and other species). Research suggests that the effect of certain trace organics on the endocrine system are elicited at extremely low concentrations, hence the concern for endocrine-active substances in the environment.

Treatment of trace organics in wastewater is highly variable depending upon a plant's influent characteristics, solids retention time (SRT), hydraulic retention time (HRT), and the presence or absence of certain treatment technologies (e.g., membranes or advanced oxidation). For some compounds, longer HRTs and SRTs correspond to greater removal rates of the contaminant. However, several trace organics (such as fragrances [galaxolide] and fire retardants [trichloroethyl phosphate, TCEP]) indicate poor removal through wastewater treatment plants regardless of the type or design of a wastewater treatment facility.

There are many published studies, as well as on-going research, that evaluate the removal efficiency of different filtration technologies. Conventional tertiary filtration does not provide significant benefit for trace organic removal. Micro-filtration (MF) and ultra-filtration (UF) membranes have also shown little additional benefit for trace contaminant removal as compared to conventional activated sludge. Trace organics are generally not efficiently removed by filtration processes such as in MF or UF membranes. Nanofiltration and reverse osmosis membranes consistently provide a higher level of treatment than MF or UF systems as the removal mechanism is based upon rejection of specific molecular weight classes rather than a particle-based filtration process. Reverse osmosis provides the best positive barrier to trace organics, a finding that is consistent among many published studies.

Advanced oxidation processes (AOPs) are the next level of treatment for water and wastewater providers for significant trace organics removal. Advanced oxidation relies on the formation of hydroxyl radicals, not to be confused with the hydroxide ion. The chemistry is complex, and the process can be expensive depending upon the water quality. Hydroxyl radicals can be generated in a number of ways, but the more common applications are ozonation in the presence of effluent organic matter, ozone plus hydrogen peroxide, and UV light plus hydrogen peroxide. In UV/AOPs, the UV dose required for advanced oxidation is an order of magnitude higher than the dose needed for normal disinfection and only around 10 percent of the applied peroxide is converted to hydroxyl radicals during the process. In ozone-based AOPs nearly all of the peroxide is converted to hydroxyl radicals, but at the expense of the dissolved ozone concentration.

During the decay of ozone, limited amounts of highly reactive hydroxyl radicals are formed, a process that is enhanced at a higher pH and in the presence of organic matter. However, ozone alone does not typically produce enough hydroxyl radicals to form an advanced oxidation process. Thus, in most cases hydrogen peroxide is added to the water as a hydroxyl radical promoter. Ozone alone has been shown to be effective at emerging contaminant removal, provided the contaminant in question is amenable to

oxidation. There are many contaminants, however, which are not easily oxidized by ozone alone, but which can be oxidized by AOPs (either ozone/peroxide or UV/peroxide). The Water Research Foundation (formerly AwwaRF) published a study in 2007 that reviewed trace organics removal in drinking water and reclaimed water. This particular study also looked at ozonation of wastewater effluent and found that ozone decay rates are faster in tertiary treated wastewater than finished water, indicating the need to carefully evaluate dosing schemes for different qualities of water. In both types of water, however, some compounds such as TCEP (a common fire retardant), were resistant to oxidation and advanced oxidation, whereas most of the other compounds were removed in the 80 percent to 99 percent range. Ozone in combination with peroxide generally improved removal by 5 to 15 percent. However, the decision to use ozone or other AOPs for trace contaminant oxidation should be carefully evaluated against other treatment objectives including disinfection and color removal.

### 1.5 Applicability for Expansion and/or Decentralization

The processes discussed herein are extended aeration oxidation ditches, plug-flow extended aeration conventional activated sludge for advanced nutrient removal, submerged membrane bioreactors, integrated fixed-film activated sludge, moving bed biological reactors, and sequencing batch reactors. A few processes are more specific for retrofits of existing activated sludge processes, such as integrated fixed-film activated sludge, membrane bioreactors, and moving bed biological reactors. Several of these technologies may also be used for plant expansions or stand-alone facilities, to include membrane bioreactors, sequencing batch reactors, plug-flow conventional activated sludge, or oxidation ditches.

## 2. Extended Aeration Oxidation Ditches

The activated sludge process at the SCWWTP is an EIMCO extended aeration oxidation ditch equipped with mechanical submerged turbine aerators. The process consists of two 8-mgd trains with a dedicated upstream anoxic zone in each train. Influent flow is combined with return activated sludge from the secondary clarifiers in an influent splitter box upstream of the anoxic basins. Flow is hydraulically divided between the two process trains. Oxidation ditches are being addressed in this TM to assess their capability for advanced nutrient removal.

### 2.1 General Description and Applications

Oxidation ditches are extended aeration, oval-shaped activated sludge units with solids residence times typically ranging from 20 to 30 days. Oxidation ditches typically follow preliminary treatment processes, such as screening and grit removal. The basins use mechanical aeration devices (usually brush-rotor or disk type) and mechanical mixers to provide adequate oxygen and to maintain mixed liquor in suspension. In order to keep the fluid velocity in an oxidation ditch high enough to maintain MLSS suspension, the basin depth must be held to a maximum, typically between 15 and 17 feet, which increases the footprint of the oxidation ditch. Oxidation ditches are commonly used in plants where land is widely available or in smaller treatment facilities.

Oxidation ditches may also be designed to accommodate partial influent equalization. The longer design hydraulic residence times allow for more volume to be available for treatment of peak hour flow. Oxidation ditches may be conservatively sized to handle a peak hour flow for an extended period of time.

### 2.2 Operation

Typical wastewater velocity in the channels of an oxidation ditch ranges from 0.8 – 1.0 ft/s. The mixed liquor completes a tank circulation in 5 to 15 minutes. Typical solids retention time (SRTs) in extended aeration oxidation ditches are 15 to 20 days with MLSS concentrations of 3,000 to 5,000 mg/l. Oxidation ditches with nitrogen removal processes often operate with a 20 to 30 day SRT and MLSS concentrations of 2,000 to 4,000 mg/l. Oxidation ditches also typically operate at food to mass (F:M) ratios of 0.04 to 0.10 lb BOD/lb MLVSS.

### 2.3 Nutrient Removal Performance

Oxidation ditches may have anoxic zones designed for denitrification so that nitrogen removal may take place, either internal to the ditch or as a separate tank. An anoxic zone is followed by an aerobic zone downstream of the aerators. As the dissolved oxygen concentration decreases and becomes depleted by the oxygen uptake of biomass, an anoxic zone is created. Additionally, simultaneous nitrification and denitrification will occur due to the oxygen gradient in the depth profile of the basin. For nitrogen removal purposes, oxidation ditches may be designed to have several channels within one oval-shaped structure. The purpose of this design is to provide anoxic zones in the outer-most channel for denitrification, followed

by aerobic zones in the inner-most channels. In order for an oxidation ditch to accommodate nitrogen removal, sufficient basin volume is required, as well as dissolved oxygen (DO) control. With proper operation and control, oxidation ditches can easily produce an effluent of less than 10 mg/l total nitrogen. Oxidation ditches may also be designed for both nitrogen and phosphorus removal so that the depth of the ditch is divided into three layers. In this design, the top layer is the aerobic zone, the middle layer is the anoxic zone, and the deepest layer is the anaerobic zone designed for phosphorous release.

Oxidation ditches are typically followed by secondary clarifiers for solid-liquid separation. Just as in conventional activated sludge, a portion of the sludge collected in secondary clarifiers (e.g., return activated sludge), is recycled and mixed with influent flow to the oxidation ditch in order to maintain sufficient MLSS concentrations in the process basins. In addition to recycle activated sludge (RAS) recycle, an internal recycle may be implemented to achieve denitrification (nitrate removal), although this practice is not common for this process.

## 2.4 Design Criteria

According to the Design Criteria for Sewage Works set forth by the TDEC Division of Water Pollution Control (WPC), there are specific guidelines that must be met in the design of oxidation ditches. Similar to conventional activated sludge processes, pretreatment processes, such as the removal of grit, debris, oil and grease, and the screening of solids, are required prior to the oxidation ditch process. Some of the major guidelines pertain to different equipment including aeration equipment, aeration tank details, and sidewall depth. The aeration equipment must be designed to transfer 2.35 lbs of oxygen per lb of BOD at standard conditions (including nitrifying conditions). The minimum average velocity must be 1.0 ft/s based on the pumping rate of the aeration equipment and the aeration basin cross-sectional area. Additionally, each basin must have a minimum of two aerators. One of the aeration tank criteria includes details on the locations of influent and effluent points, as well as the requirement to control the water level in the aeration channel. Also, baffles may be used on basins with over 6 feet liquid depth and when they are recommended by the manufacturer to provide proper mixing. The sidewall tanks may either be sloping at 45 degrees or straight at 90 degrees. For both types of sidewall, WPC provides design criteria for liquid depths, channel widths, center islands, center dividing walls, length of straight sections, and the preferred location of the mechanical aerators.

## 2.5 Summary of Advantages and Disadvantages

Nutrient removal in oxidation ditches is feasible; however, it can be difficult to control the process operation in the channels as compared to conventional plug-flow activated sludge processes. Oxidation ditches provide minimal control of reduction-oxidation (e.g., redox) zones and recycle rates that are critical to advanced nutrient removal. The advantages and disadvantages of complete-mix oxidation ditches are summarized in Table 2-1.

**Table 2-1: Summary of Advantages and Disadvantages of Oxidation Ditches**

| Advantages | Disadvantages |
|---|---|
| Well-stabilized sludge, less biosolids production. | Large footprint due to limited tank depth. |
| Can achieve BOD, SS, total nitrogen, and total phosphorous reduction depending on process design. | Low F:M bulking is possible. |
| Low operational requirements and maintenance costs. | Requires more aeration energy than conventional plug-flow treatment. |
| Economical process for small plants. | Plant capacity expansion is more difficult without adding new ditches. |
| Constant water level and continuous discharge. | Effluent suspended solids may be high when compared to other activated sludge systems. |
| Due to the large design volume and generous process design, may act as an influent equalization tank and still meet effluent limits. | Aerosols from mechanical aeration and mixing |
| | Difficult to produce a calibrated process model to investigate future nutrient removal scenarios |
| | Can only reliably achieve total nitrogen removal between 6 and 8 mg/l, but range will depend on biological design. |

## 3. Plug Flow Conventional Activated Sludge for Advanced Nutrient Removal

### 3.1 General Description

Conventional activated sludge systems are primarily composed of an aerated, suspended growth bioreactor, liquid-solids separation (e.g., secondary clarifier), and a recycle stream for return activated sludge. A conventional activated sludge process consists of an aerated zone followed by a secondary clarifier from which the recycle activated sludge is recycled back to the reactor. In the bioreactor, microorganisms remove soluble and particulate organic matter. Secondary clarification separates the mixed liquor suspended solids (MLSS) from the treated wastewater. Bioreactors in plug flow conventional activated sludge systems are typically long and narrow.

Nitrogen and phosphorus are essential components of cells. Therefore, some nutrient removal occurs naturally in any biological treatment system, the amount depending on the quantity of sludge produced and its nutrient content. Conventional biological treatment usually will remove approximately 20 to 30 percent of influent nitrogen and phosphorus for metabolic growth.

An increase in biological-nitrogen and/or phosphorus removal efficiency requires that the activated sludge process be modified to enhance nutrient uptake biologically or to accomplish removal through other mechanisms (e.g., chemical addition for phosphorus removal). Specifically, the control of internal recycles and the separation of reduction-oxidation zones in the activated sludge process is the widely accepted method to modify a conventional activated sludge process for advanced biological nitrogen and phosphorus removal. Several activated sludge processes can be employed with different zone configurations, recycle rates, and recycle return locations, as follows:

- 5-stage process (Bardenpho©) – Influent to anaerobic zone followed by anoxic, aerobic, post-anoxic, aerobic process zones with a 4xQ internal recycle (aerobic ⇨ anoxic) and a 1 to 1.5xQ return activated sludge (RAS) rate (RAS ⇨ anaerobic).
- 4-stage process with sidestream – Influent to anoxic zone followed by aerobic, post-anoxic, aerobic process zones with a sidestream anaerobic zone (RAS ⇨ anaerobic), a 4xQ internal recycle (aerobic ⇨ anoxic), and a 1 to 1.5xQ RAS rate.
- Virginia Initiative Process (VIP) – Influent to anaerobic zone followed by anoxic, aerobic, post-anoxic, aerobic process zones with a 4xQ internal recycle (aerobic ⇨ anoxic), a 1xQ internal recycle (anoxic ⇨ anaerobic), and a 1 to 1.5xQ RAS rate (RAS ⇨ aerobic).
- $A^2O$ – Influent to anaerobic zone followed by anoxic and aerobic zones with a 4xQ internal recycle (aerobic ⇨ anoxic) and a 1 to 2xQ RAS rate (RAS ⇨ anaerobic).
- 4-stage process – Influent to anoxic zone followed by aerobic, post-anoxic, aerobic process zones with a 4xQ internal recycle (aerobic ⇨ anoxic) and a 1 to 1.5xQ RAS rate (RAS ⇨ anaerobic).

- Modified Ludzack-Ettinger (MLE) – Influent to anoxic zone followed by an aerobic zone with a 4xQ internal recycle (aerobic ⇨ anoxic) and a 1 to 1.5xQ RAS rate (RAS ⇨ anaerobic).
- A/O – Influent to anaerobic zone followed by an aerobic zone with a 1 to 1.5xQ RAS rate (RAS ⇨ anaerobic).

Typically, the 5-stage, 4-stage with sidestream, and VIP processes are the most common processes for advanced nitrogen and phosphorus removal. These three process all use a variation of the classic 5-stage process except for variations in internal recycle rates and locations. The 4-stage is a modification of the 5-stage process whereby the anaerobic zone is not present. The 4-stage process is typically used for target effluent nitrogen concentrations less than 4 mg/l. The A2O process is not as reliable as the 5-stage process, but can achieve nitrogen and phosphorus removal with proper design and plant optimization. The MLE process is typically used for nitrogen removal only, but can be combined with chemical precipitation for phosphorus removal. The AO process is typically used for high rate biological phosphorus removal only. Table 3-1 provides a summary of expected effluent total nitrogen and phosphorus concentrations for each treatment process. Figure 3-1 provides an illustration of each treatment process.

It should be noted that tertiary sand filtration is a critical component of advanced nutrient removal. Tertiary filters remove nutrients in the particulate phase up to 0.20 µm. Deep-bed tertiary filters can also be used for nitrate polishing via denitrification with a carbon source addition.

**Table 3-1: Summary of Expected Effluent Total Nitrogen and Phosphorus Concentrations for Different Conventional Plug Flow Activated Sludge Processes**

| Treatment Process | Expected Effluent Nitrogen Range | Expected Effluent Phosphorus Range | Comments |
|---|---|---|---|
| 5-Stage | 3 – 5 mg/l | < 1 mg/l | • Control over internal recycles.<br>• Long hydraulic detention times are required.<br>• Phosphorus removal in the mainstream reactor flow, and not as buffered from daily flow variations.<br>• Dissolved oxygen control important. |
| 4-Stage with Sidestream | 3 – 5 mg/l | < 1 mg/l | • Control over internal recycles.<br>• Long hydraulic detention times are required.<br>• Phosphorus removal is in the sidestream, buffered from flow variations. |
| Virginia Initiative Process | 3 – 5 mg/l | < 1 mg/l | • Control over internal recycles.<br>• Long hydraulic detention times are required.<br>• Phosphorus removal is in the mainstream reactor.<br>• Additional recycle pump needed (typically needed for an MBR system also). |
| $A^2O$ | 4 – 6 mg/l | < 2 mg/l | • Good sludge management required to be efficient.<br>• High RAS rates needed.<br>• Long hydraulic detention times are required.<br>• Phosphorus removal is in the mainstream reactor. |
| 4-Stage | 3 – 5 mg/l | N/A *(unless chemical precipitation is used)* | • Additional polishing of nitrogen in the post-anoxic zone.<br>• Phosphorus removal is luxury uptake or cell maintenance.<br>• Control over internal recycles. |
| Modified Ludzack-Ettinger (MLE) | 6 – 8 mg/l | N/A *(unless chemical precipitation is used)* | • Typically used where only nitrogen needs to be removed or a more balanced sludge system is desired. |
| A/O | N/A | < 1 mg/l | • Only phosphorus removal with this process.<br>• Requires a high wasting rate and a low SRT to function efficiently.<br>• A/O is not applicable for reliable nitrification. |

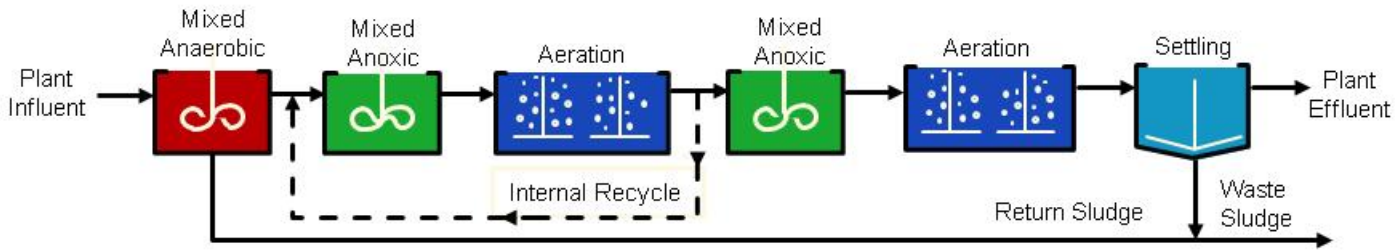


a) 5-Stage Process for Nitrogen and Phosphorus Removal

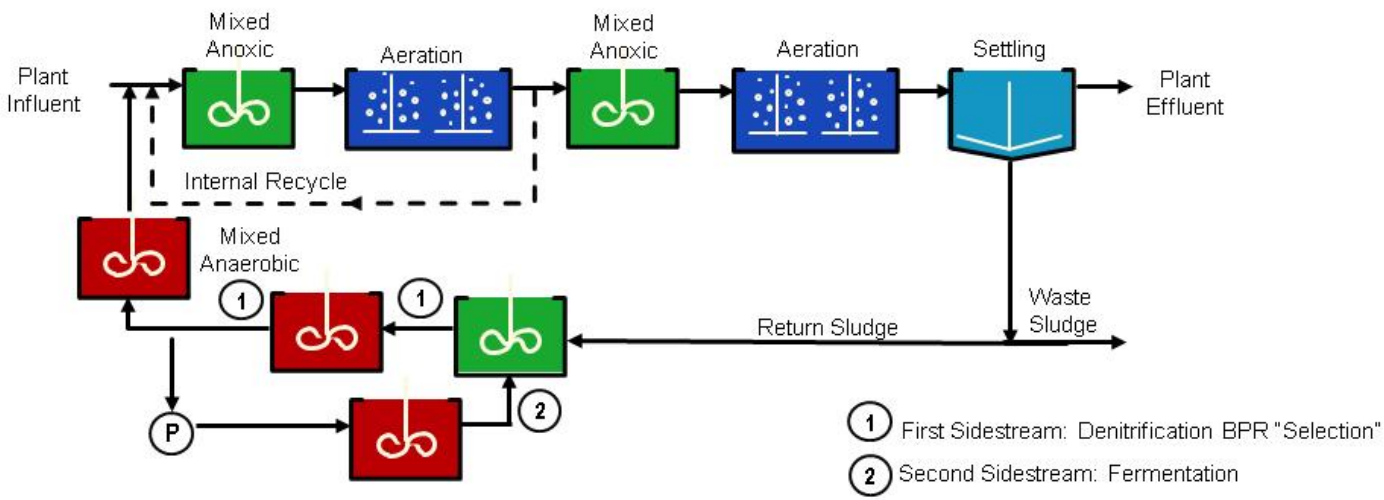


b) Sidestream Fermentation for Phosphorus Removal and Nitrogen Removal

**Figure 3-1: Process Flow Diagrams for Conventional Activated Sludge with Advanced Biological Nitrogen and Phosphorus Removal**

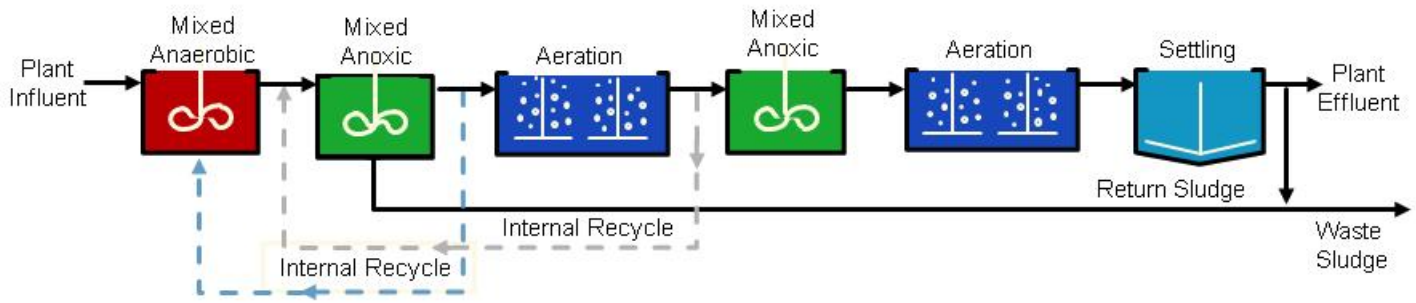


c) Virginia Initiative Process (VIP) for Nitrogen and Phosphorus Removal

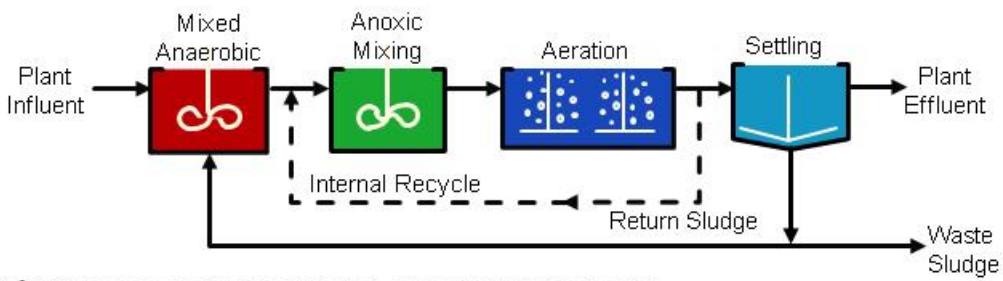


d) $A^2/O$ Process for Nitrogen and Phosphorus Removal

**Figure 3-1: Process Flow Diagrams for Conventional Activated Sludge with Advanced Biological Nitrogen and Phosphorus Removal (continued)**

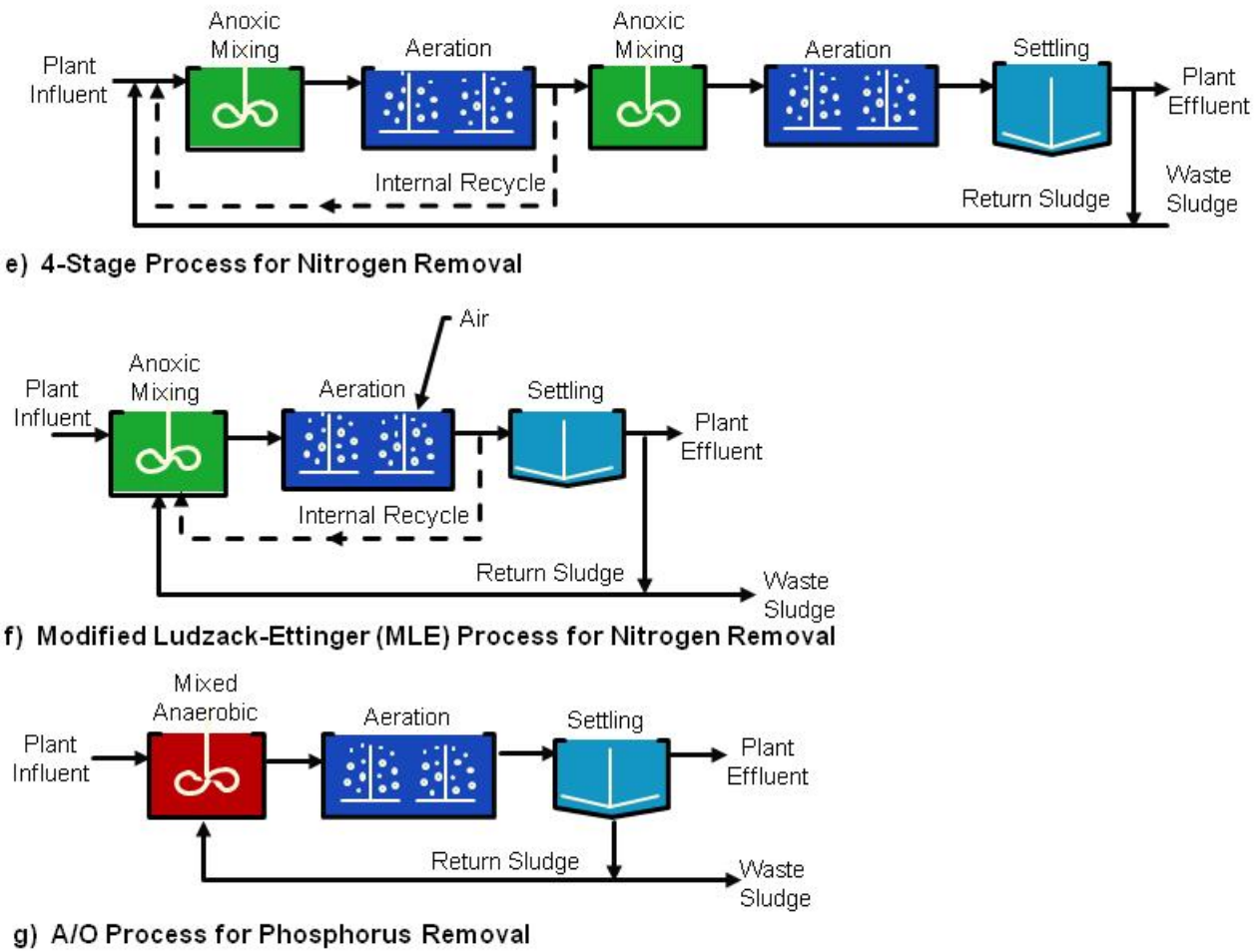


**Figure 3-1: Process Flow Diagrams for Conventional Activated Sludge with Advanced Biological Nitrogen and Phosphorus Removal (continued)**

## 3.2 Design Criteria

The TDEC Design Criteria for Sewage Works report states the requirement of pretreatment processes, such as the removal of grit, debris, oil and grease, and the screening of solids prior to any activated sludge process. The design criteria for aeration tanks indicate that the size of the aeration tank is typically based on the F:M ratio or the SRT. Additionally, the dimensions of each aeration tank must be sufficient for effective mixing and utilization of oxygen. The liquid depth is typically between 15 and 22 feet.

Conventional plug flow activated sludge systems typically operate at SRTs of 3 to 18 days, depending on whether nitrification or denitrification is required. Hydraulic retention times range from 10 to 24 hours. Typical F:M ratios range from 0.1 to 0.2 lb BOD / lb MLVSS·d with MLSS concentrations ranging from 2,000 to 4,000 mg/l.

Oxygen requirements in activated sludge systems depend on the BOD loading, degree of treatment, and MLSS concentrations in the reactor. The TDEC design criteria does require, however, that the dissolved oxygen concentration be a minimum of 2.0 mg/l at average design load and 1.0 mg/l at peak design loads throughout the mixed liquor. Additionally, the design oxygen requirements for all activated sludge processes must be 1.1 lbs per lb peak $BOD_5$ (except for extended aeration processes). Oxygen requirements for nitrification are 4.6 lb $O_2$/lb nitrogen in addition to the requirement for carbonaceous BOD removal.

## 3.3 Summary of Advantages and Disadvantages of Conventional Activated Sludge

The advantages and disadvantages of plug flow conventional activated sludge for advanced nutrient removal are provided in Table 3-2. Conventional plug flow activated sludge is one of the most common biological processes being used today, as most of the benefit of this process is due to prolonged experience and testing.

**Table 3-2: Summary of Advantages and Disadvantages of Conventional Activated Sludge**

| Advantages | Disadvantages |
|---|---|
| Design well characterized, performance predictable. | Larger footprint than other treatment options. |
| Established design and operating parameters. | Equipment intensive. |
| Flexibility for future upgrades. | Sophisticated operation. |
| May be used for a variety of applications, operating schemes, and plant sizes. | Equalization not required, but recommended for process stability. |
| Multiple treatment train configurations are possible to achieve advanced / enhanced nutrient removal. | Process is not specifically designed for influent equalization. The process will treat a peak hour flow, but not for an extended period of time. |
| May achieve higher level of ammonia removal than complete-mix process. | Lighter, fluffier sludge flocs that may require slightly larger clarifiers. |

# 4. Submerged Membrane Bioreactors

## 4.1 General Description

### *4.1.1 MBR System Description*

Membrane bioreactors (MBRs) use the combination of suspended growth activated sludge and membrane filtration separation processes. The use of membrane bioreactors is becoming more popular since costs have decreased and more stringent effluent limits are being required. Due to its small footprint, this technology is a viable option in land-constrained areas that are facing strict nutrient limits or capacity upgrades. Examples of other common MBR applications include reclaimed water reuse and the development of satellite treatment plants.

The MBR process consists of an activated sludge system coupled with a membrane system. Membranes replace secondary clarifiers and tertiary filters in a conventional treatment process. Membranes must be preceded by a conventional activated sludge system, with or without advanced nutrient capabilities depending on the effluent disposal goals. The separation of reduction-oxidation zones and the use of internal recycles are still required to meet advanced nutrient removal goals. Similar to a conventional activated sludge system, the biological process in a membrane system can be configured in several ways (refer to Figure 3-1). Return sludge is collected from each membrane tank and recirculated back to the activated sludge process.

An MBR system consists of the following components: activated sludge reactors, process air blowers, membrane reactors, membrane system, membrane blowers, return activated sludge pumps, and waste activated sludge (WAS) pumps. The purpose of activated sludge reactors is the same as in the conventional activated sludge process: the use of microorganisms to remove soluble and particulate organic matter. Immediately downstream of the bioreactors are the membrane reactors. The membranes are submerged in mixed liquor. Either gravity or low-head pumps are used to separate the permeate from the activated sludge solids. Blowers are required in the bioreactors for process requirements. A separate set of blowers is required in the membrane reactors to maintain the proper thickness of sludge cake on the membrane surface. RAS pumps are used to recirculate activated sludge back to the bioreactor to keep the solids in the membrane reactor within a target range and not overly concentrated. The WAS pumps route waste sludge from the membrane reactors to solids handling facilities. Figure 4-1 provides an illustration of the MBR process.

Membranes are defined by pore size, which dictates the trans-membrane pressure required in a membrane process. The trans-membrane pressure (TMP) is the pressure required to generate flow across a membrane. The smaller the pore size the greater the TMP that is required. Micro-filtration (MF), ultra-filtration (UF), nano-filtration (NF), and reverse osmosis (RO) are the four types of membrane processes characterized by decreasing pore size, respectively, and have an associated increase in TMP. MF and UF membranes are utilized in MBR systems, while NF and RO membranes are typically only used for tertiary treatment. Some of the major players in the MBR market in North America include GE/Zenon Environment

Inc., Siemens/USFilter Corp., and Kubota/Enviroquip. Of the major players, Zenon has had the most experience and is the dominant manufacturer in this industry, especially for projects greater than 5 mgd. Other manufacturers of MBR systems that are not as common in North America include Mitsubishi, Kruger/Toray, and Koch/Puron.

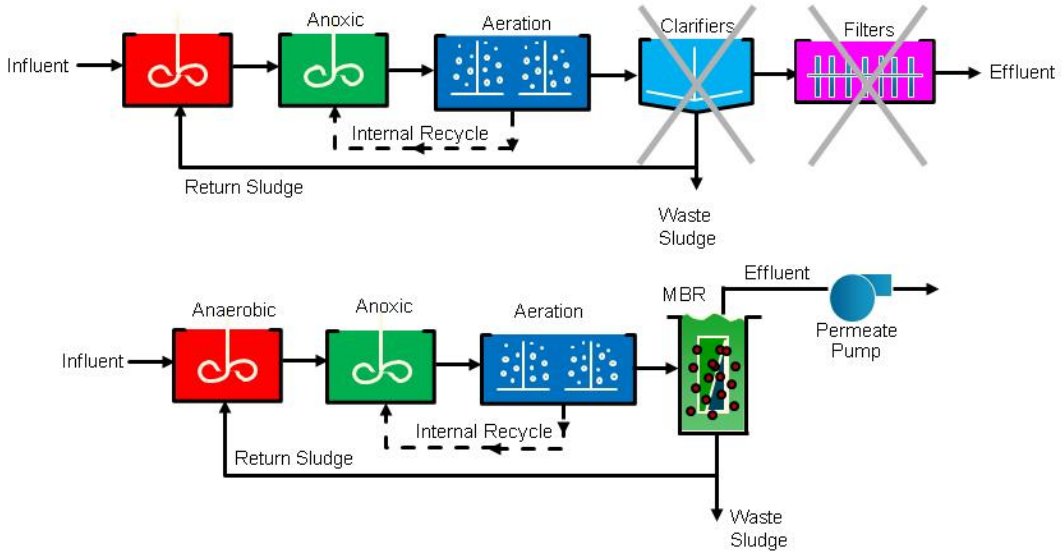


**Figure 4-1: Illustration of the Membrane Bioreactor System Process**

*4.1.2 Terminology*

Some of the terminology commonly used in discussions of MBRs is as follows:

**Membrane**: The membrane is a thin layer of material permeable to a substance in solution.

**Permeate**: Permeate is the treated effluent of a membrane system.

**Flux**: Membrane flux is the volumetric filtration rate for a given surface area of membrane, reported in gallons per square foot per day (gfd). The design flux is inversely related to temperature so that areas of colder temperatures require greater membrane surface areas.

**Transmembrane pressure (TMP)**: TMP is the pressure required to generate flow across a membrane typically reported in bars or psi. The TMP can also be described as the pressure differential between the membrane feed and permeate.

**Permeability**: Membrane permeability is the volumetric filtration rate for a given area of membrane when a pressure of 1 psi is applied, or the flux rate divided by the trans-membrane pressure. This is reported in gallons per square foot per day per psi (gfd/psi).

**Backwash**: Backwashing is the process of reversing the flow of the permeate through the membrane to remove solid particles from the membrane pores, this is also known as backpulse.

**Maintenance clean**: Maintenance cleaning is an intensive air scouring and backwashing process intended to decrease the frequency of recovery cleaning, it is also known as enhanced backwash or clean-in-place (CIP).

**Recovery clean**: Recovery cleaning is more aggressive than maintenance cleaning and is intended to recover membrane permeability. Recovery cleaning is also known as intensive cleaning or clean-in-place (CIP).

**Mechanical clean**: Mechanical cleaning is the removal of solids that build up in small membrane units by washing solids off the membrane and manually removing the solids. This is also known as manual cleaning, hand cleaning, physical cleaning, and membrane sludging.

**Clean Water Testing**: This is a test usually performed after installation of the membrane and before it is placed online. It tests that the performance of the membrane is as stated by the manufacturer and it also provides a foundation on which to analyze changes in flux and permeability.

#### *4.1.3 Effluent Quality*

One of the primary advantages of MBR systems is the high quality effluent in terms of turbidity, bacteria, TSS, and BOD. However, one common misconception regarding MBRs is that they are successful in the removal of nutrients in both the particulate and soluble phases, while in fact, they only remove nutrients in the particulate phase. Therefore, the removal of soluble nitrogen and phosphorous must be incorporated in separate processes. Membrane technology is capable of producing high quality effluent, provided in Table 4-1.

**Table 4-1: Typical Effluent Quality of MBRs**

| Parameter | Typical Effluent Concentration |
|---|---|
| $BOD_5$ | < 3 mg/l |
| TSS | < 1 mg/l |
| $NH_3$-N | < 0.5 mg/l |
| Total Nitrogen | < 3 mg/l |
| Total Phosphorus | < 0.05 mg/l |
| Turbidity | < 0.2 NTU |

## 4.2 Hollow Fiber versus Flat Sheet

The two most common membrane configurations in current use in MBRs are hollow fibers and flat sheets. Hollow fiber membranes are long and narrow tubes grouped in bundles that are generally mounted vertically (although some are mounted horizontally) in frames and placed in a single module. They typically fall in the range of 0.04 to 0.1 micron nominal pore size. However, it should be noted that there are some hollow fiber membranes with pore sizes of 0.4 micron. Membrane flat sheets are flat sheets of membranes with pore sizes between 0.08 to 0.4 µm that are separated by spacer skeletons. Figure 4-2 and 4-3 provide illustrations of the flat sheet and hollow-fiber type membranes, respectively.

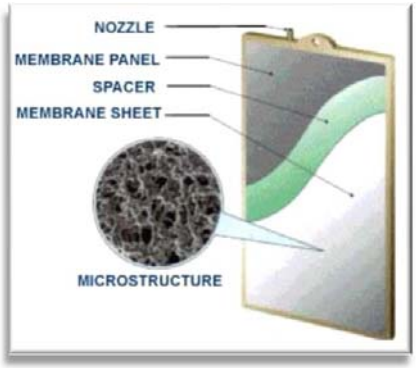


**Figure 4-2: Example of a Flat Sheet Type Membrane**

**Figure 4-3: Example of a Hollow Fiber Type Membrane**

While the effluent quality remains the same in both types of membranes, there are some differences concerning operational and maintenance processes. The first is that hollow fibers can be more susceptible to solids buildup and typically require more stringent screening in the pretreatment process than do flat sheets. Stringy materials, such as hair, interfere with the efficiency of hollow fiber membranes and increase maintenance requirements. It should be noted, however, that there is evidence of sludging on flat sheets as well. Additionally, sometimes hollow fiber systems have smaller MBR reactors but larger aeration basin requirements than flat sheet systems. Flat sheet systems typically operate at much higher MLSS concentrations than hollow fiber systems. However, the sum of the surface area of the membrane reactors and aeration basins are comparable between the two types of membrane systems.

The aeration methods between hollow fiber and flat sheet systems are different even though the total air systems are similar in size and horsepower. In the hollow fiber system, air is pulsed or cycled between membrane cassettes every 10 to 30 seconds. Conversely, the flat sheet aeration system uses variable speed drives to adjust aeration and power usage. Finally, the operation and maintenance of permeate and flux varies for hollow fiber and flat sheet systems. Hollow fiber systems operate at higher trans-membrane pressures, and usually require both maintenance and recovery cleaning every 7 days and 3 months,

respectively. Flat sheet systems operate at lower TMPs and require either maintenance or recovery cleaning, but rarely both. A summary of the differences between hollow fiber and flat sheet membranes is provided in Table 4-2.

**Table 4-2: Summary of Differences between Hollow Fiber and Flat Sheet MBR Systems**

| Parameter | Hollow Fiber | Flat sheet |
|---|---|---|
| Pore Size | 0.04 – 0.1 µm | 0.08 – 0.4 µm |
| Pretreatment | Requires more stringent screening/pretreatment processes. | Less susceptible to buildup of stringy material. |
| Reactor Size | Smaller MBR reactors and larger aeration basins. | Larger MBR reactors and smaller aeration basins. |
| Membrane Aeration Method | Intermittent aeration. | Uses variable speed drives to adjust aeration. |
| Operation and Maintenance | Requires both maintenance and recovery cleaning at higher frequencies. | Usually requires either maintenance or recovery, but rarely both. |

## 4.3 Design and Operational Considerations

### *4.3.1 Pretreatment & Equalization Requirements*

Since it is important to minimize the buildup of grit, hair, fats, oils, grease, and suspended solids on the membrane surface, pretreatment plays a significant role in protecting membranes. Some consequences of poor pretreatment processes include: damage to the membranes, decrease in flux, premature membrane replacement, reduced hydraulic capacity of the membranes, and degradation of the effluent quality. Screening can either be accomplished in a single stage or dual stage. The dual stage configuration consists of a 6 mm fine screen followed by a 2 mm (minimum) ultra-fine screen. Single stage screening must include only a 2 mm (minimum) ultra-fine screen. The single stage screening configuration will yield a larger fine screen due to increased head loss from the absence of an upstream screen. Pretreatment should also include grit and fats, oils, and grease (FOG) removal systems if FOG is anticipated to be greater than 40 mg/l.

Equalization is critically important to the operation of a membrane system to manage peak flow and extend the life of the membranes. Typical membranes have the capacity of treating peak flows 1.5 to 2 times the average flow rate. Installing additional membrane capacity to treat higher flows results in increased equipment, operation, and maintenance costs, as well as overdesigned processes and decreased aeration efficiency. Therefore, influent equalization is typically implemented as it is the most cost effective option for dealing with peak flow. Alternatives to dedicated influent equalization are a N+1 membrane reactor design, partial influent equalization in the biological process (e.g., the water surface elevation in the first activated sludge basin is allowed to fluctuate, so flow must be pumped to the

remainder of the biological process), or more membrane surface area is installed to accommodate extended peak flow periods.

#### *4.3.2 Operation of MBRs*

One important aspect of MBR systems is that operation and control is heavily automated and PLC-driven. Proper operation of MBR systems relies on instrumentation such as on-line transmitters, gauges, or laboratory equipment to measure pressure, temperature, flow, pH, BOD, COD, solids concentrations, ammonia, phosphorous, and turbidity. The automation system allows a properly-operated system to run for extended periods with little operator input. However, the level of automation may also be a disadvantage because in the case that an instrument fails, a backup procedure must be identified and ready to be implemented.

An advantage of MBR systems is the ability to operate at high MLSS concentrations due the effectiveness of membranes in solid-liquid separation. Typical MLSS concentrations range from 8,000 to 18,000 mg/l in membrane bioreactors. At such high MLSS concentrations, the size of the bioreactor does not have to be as large as it does for conventional activated sludge. In fact, the ratio of the bioreactor sizes for MBR systems to conventional treatment systems range from 0.5 to 0.67:1 for biological nutrient removal processes.

Operational processes in MBR systems include maintaining biofilm thickness, permeate quality, membrane flux, and biofilm porosity. For this reason, membranes operate in different modes: permeation mode, relaxation mode, and backwash mode. Membranes operate in permeation mode for the majority of the time during which permeate passes through the membrane unit and is collected and transported to downstream processes. During the permeation mode, the buildup of solids on the membrane surface is controlled by the membrane air scouring system. In order to reduce energy demand and operational costs, some membrane basins implement intermittent air scouring in which valves are used to open or shut the flow of air several times per minute. Intermittent air scouring operates for 25 to 50 percent of the time while continuous scouring operates for 100 percent of the time.

The purpose of relaxation and backwash modes is to control the buildup of solids on the membrane surface and to recover the TMP to an operable level using air scouring processes. During the relaxation mode, air scouring remains in operation and permeate is no longer passing the membrane. Instead, particles are released from the membrane surface and are removed by air scour. Typical relaxation cycles are 30 to 60 seconds long and occur every 5 to 10 minutes.

If membrane relaxation is not effective in reducing the TMP to adequate levels or is not providing adequate fouling control, the membrane may go into backwash mode. The flow of permeate through the membranes is reversed via a low pressure and a high flow rate such that particles lodged in the membrane pores are removed. Backwashing may also be chemically enhanced. Chemical solutions may be added to the backwash water to treat specific types of fouling.

Controlling biofilm porosity may be accomplished by adding biopolymers such as polysaccharides and proteins which decrease the porosity (e.g., clogging) of the membrane material. Membrane tanks may also be operated in standby mode. One membrane reactor is temporarily taken out of service, typically less than one day. The membrane reactor is not usually drained during standby mode, but air scouring rates are reduced. It is important to note that during standby modes or shutdowns of membrane tanks, the membranes must be kept wet at all times.

During the operation of MBRs, it is important for plant operators to periodically measure and record certain operational parameters. These parameters include: air scour flow rate, blower discharge pressure, TMP, raw wastewater characteristics, bioreactor and membrane tank water quality, waste and recycled activated sludge flow rates, permeate water quality, and permeate flow rate. Monitoring these operational parameters assists in detecting membrane fouling and deterioration (discussed in section 4.8).

#### *4.3.3 Fouling*

One major drawback in MBR systems is membrane fouling. Fouling may be caused by scaling, biofouling, particle fouling, or chemical fouling. Other contributors include oil and grease, coagulants (such as alum or ferric chloride), and antifoaming chemicals. Some of these foulants cannot be removed from the membrane surface and consequently cause irreversible fouling.

There are three major categories of constituents that cause membrane fouling: organic, inorganic, and physical. Organic fouling is the most common form of fouling and is the biological growth that takes place on membrane surfaces and pores. It is caused by the soluble and colloidal organics in the mixed liquor biomass. Inorganic fouling is caused by suspended solids and dissolved inorganics, which may precipitate on the membrane surface. Physical fouling occurs when small particles, grit, hair, and other materials buildup on the membrane surface. The conditions that increase the potential of membrane fouling include: increase in MLSS concentration, increase in SRT, increase in HRT, increase in soluble microbial products, and increase in extracellular polymeric substances. Conditions that decrease membrane permeability include an increase in filamentous bacteria, decrease in temperature, increase in viscosity, and decrease in air scour intensity.

#### *4.3.4 Maintenance and Cleaning*

In addition to the regular air scour and relaxation events, chemical cleaning, such as the application of sodium hypochlorite, citric acid, and oxalic acid, and backwashing systems must be implemented to reverse the membrane fouling that occurs over time. Each type of fouling is associated with a cleaning chemical that may be used to reverse the fouling. While membrane cleaning can differ between manufacturers, some general types of cleaning chemicals used for membranes are summarized in Table 4-3.

Depending on the membrane technology being implemented, membrane cleaning may take place within the basin or external to the MBR reactor basin. In either case, it is important to account for membrane

cleaning when designing the membrane tanks, as well as deciding on the number of treatment trains in an MBR process. There are two types of chemical cleaning: maintenance and recovery. Maintenance cleaning is an intensive air scouring and backwashing process intended to decrease the frequency of recovery cleaning. Usually maintenance cleaning involves removing an organic constituent by adding an oxidant, such as sodium hypochlorite. Recovery cleaning is more aggressive and intended to recover membrane permeability. The frequency of recovery cleaning may depend on operating conditions such as when the TMP reaches 2 to 3 psi, or it can be recommended by the manufacturer on a set frequency.

For both maintenance and recovery cleaning, the recommendations provided by the manufacturer should be followed as they differ with varying types of membranes. It is recommended that the cleaning strategy be adjusted based on experience with the membrane and wastewater characteristics over a period of time.

**Table 4-3: Summary of Cleaning Operations for Organic, Inorganic, and Mechanical Fouling**

| Type of Contaminant | Contaminant Components | Type of Cleaning Chemical Used | Typical Chemicals |
|---|---|---|---|
| Organic | Biogrowth, smaller substances excreted by microorganisms, dissolved organic particles | Oxidant | Sodium hypochlorite, hydrogen peroxide |
| Inorganic | Precipitation (metals, etc.), oxides formed in presence of common coagulants | Acid | Citric acid, oxalic acid, hydrochloric acid |
| Physical | Stringy materials, materials that bypass preliminary treatment | None-physically removed by hand | None |

Other types of cleaning include physical cleaning and membrane air diffuser cleaning. Physical cleaning is the removal of solids that build up in small membrane units. This is also known as membrane sludging and involves draining the basin and washing the solids off the membrane, as well as manually removing the biosolids. Air diffuser cleaning reverses the fouling that occurs on the air diffusers located below the membrane subunits and in the bioreactor. Fouled diffusers cause air scouring to not operate effectively or properly. Membrane air diffuser cleaning is typically a backflush procedure similar to membrane backwash.

Another form of maintenance is to constantly monitor the membranes for fouling, deterioration and aging. While fouling is monitored by measuring the TMP and permeability, membrane deterioration is monitored by measuring chemical and biological parameters in the permeate. One of the first indications of membrane damage is an effluent turbidity greater than 0.2 NTU. If a membrane is thought to be damaged, the next step is to identify which membrane is damaged and to identify the cause of damage using the Clean Water Test or performing a detailed visual inspection. Finally, the membrane must be repaired or replaced depending on the extent of damage that has occurred.

*4.3.5 Downstream Processes*

The implementation of MBR systems effect downstream processes in two ways. First, the MBR process produces a high-quality, low-solids effluent concentration. This usually has a positive effect on plant operation and processes downstream of the membranes. Second, membrane backwashing and relaxation cycles may result in periods of low flow more frequently than in conventional treatment. These periods of low flow may have an impact on downstream UV disinfection, a process which must have adequate flow to keep the lamps cool. However, this issue may be resolved with the increase in plant minimum flow as well as the use of a small UV recirculation pump for extreme low flow events.

While the volume of waste activated sludge of a membrane process is similar to that of conventional activated sludge, the biosolids are far more concentrated in MBR processes. Mixed liquor is typically in the 8,000 to 12,000 mg/l range prior to wasting. The high waste solids concentration must be considered when designing thickening, dewatering, and digestion processes.

## 4.4 Summary of Advantages and Disadvantages of Submerged Membrane Bioreactors

The advantages and disadvantages of membrane bioreactors with respect to conventional activated sludge systems are summarized in Table 4-4.

**Table 4-4: Summary of Advantages and Disadvantages of Submerged Membrane Bioreactors Compared to a Conventional Activated Sludge System**

| Advantages | Disadvantages |
|---|---|
| Smaller footprint. | Higher capital cost. |
| Consistent, high quality effluent-particularly for TSS. | Higher energy costs. |
| No final clarifier or filter required. | Cost of membrane replacement. |
| Resilient to fluctuations in solids loading. | Higher maintenance requirements. |
| High degree of automation. | High degree of automation. |
| No sludge settling required. | Performance is sensitive to pretreatment processes. |
| Short reactor hydraulic retention times. | Some form of influent equalization is typically required. |
| Membranes function as a positive barrier. | High flow events can lead to increased membrane maintenance. |
| | Hydraulically limited capacity through membranes. |

# 5. Integrated Fixed-Film Activated Sludge (IFAS)

## 5.1 General Description and Applications

An integrated fixed-film activated sludge (IFAS) process is an activated sludge system that contains fixed-film media in a suspended growth reactor. The fixed-film media allow attached biofilm growth within a suspended reactor, which increases the amount of biomass available. Increase in biomass increases nutrient removal with minimal increase in basin size or footprint. An IFAS system can be located in the anoxic zone, aerobic zone, or both zones. Secondary clarification and tertiary filtration processes are still required with an IFAS system and are designed similar to conventional and advanced activated sludge systems.

The IFAS configuration may vary by the type of activated sludge system and by the type of media used. A typical configuration is shown in Figure 5-1. Examples of activated sludge processes that have been used in conjunction with IFAS include conventional activated sludge (with or without advanced nutrient removal), the modified Ludzack-Ettinger (MLE) process, and step-denitrification. The different types of media include rope, sponge, plastic carrier, rotating biological contactor media, and trickling filter media. Additionally, the media may either be free-floating or located in a fixed frame in the bioreactor. IFAS systems are typically used for retrofitting plants to provide additional nitrification and BOD removal. IFAS will allow an increase in plant capacity without an increase in plant footprint. Plants with limited space for expansion, difficult subsurface conditions, or new permit limits with more stringent ammonia standards are candidates for IFAS systems.

The purpose of an IFAS system is to increase biomass growth on the media in addition to the suspended biomass. The increase in biomass results in increased nitrification rates per unit volume and consequently will reduce the total volume required for nitrification. This phenomenon may provide more volume for denitrification and phosphorous removal processes. Typical MLSS concentrations range from 1,000 to 3,000 mg/l in IFAS systems, although concentrations as high as 5,000 mg/l have been used. The sludge volume index (SVI) of an IFAS system is similar to an activated sludge system with biological nitrogen removal.

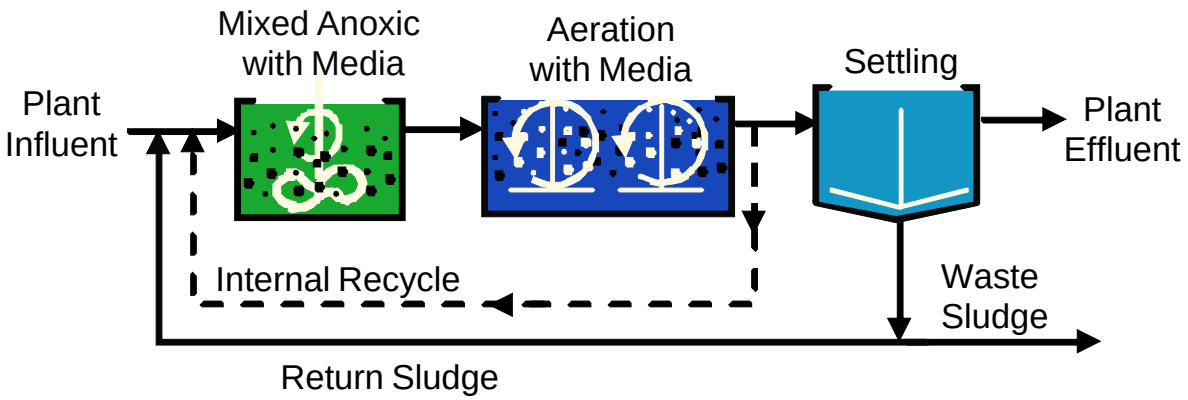


**Figure 5-1: Illustration of the Integrated Fixed-film Activated Sludge (IFAS) Process**

## 5.2 Terminology

Some of the terminology commonly used in discussions of IFAS systems is as follows:

**Rope Media**: Rope-type media consist of a polyvinyl chloride-based material that is woven in loops along the length of the rope to provide surface area for the growth of biomass. This is also known as looped-cord media or strand media. These are fixed media which are placed over and under rods within aluminum frames placed in the activated sludge basin. Typical applications of rope media include aerobic basins, or basins that alternate between aerobic and anoxic.

**Sponge**: Sponge-type media may also be referred to as reticulated foam, polyurethane foam cubes, or suspended porous support media. It is available in different dimensions, materials, pore sizes, and densities.

**Plastic Carrier Elements**: Plastic carrier media are small cylinders made of polyethylene or polypropylene. Biomass growth takes place inside the hollow tubes of the cylinders. They vary in specific surface areas provided for biofilm growth. An illustration of a plastic carrier element is provided in Figure 5-2.

**Figure 5-2: Illustration of an IFAS Plastic Carrier Element**

## 5.3 Fixed versus Free-Floating Media

An IFAS system is a maintenance intensive process. Free-floating systems require additional component installation over the fixed film media type, which include screens to contain the media within the tanks, screen-cleaning systems, and media recirculation pumps. Air diffusers are also required to provide mixing and to keep the free-floating media from clogging downstream screens. Sponge-type free-floating media require recycle airlift pumps and media cleaning pumps while plastic carriers do not. Additionally, free-floating media are more susceptible to hydraulic problems due to media clogging the screen. Free-floating media must be pumped to another tank during maintenance and cleaning, and redistributed afterwards.

Fixed media systems must be designed so that the media can be taken out or relocated during maintenance and cleaning. Odors are a significant concern when fixed film systems are dewatered as the media may quickly generate odors. Additionally, fixed media systems are generally more susceptible to supporting worm populations. The location of the media is more critical in fixed media systems than in free-floating systems due to the effect that substrate concentrations have on removal rates.

## 5.4 Operation

The operation of IFAS systems requires adequate mixing, turbulence energy, aeration, effluent screens, and foam accumulation removal systems. Mixing is usually required only in free-floating media systems to keep media uniformly distributed and in suspension. In terms of turbulence energy, free-floating systems usually have enough mixing to control biofilm growth while fixed media systems need to incorporate mixing in their designs. Adequate aeration is important in maintaining dissolved oxygen concentrations between 3 and 4 mg/l throughout the biofilm thickness. Effluent screens are only required for free-floating media and are typically submerged cylindrical screens in aerobic basins or are vertical wedge wire screens in anoxic basins. Foam accumulation is a common operational problem as the effluent screens

prevent foam from passing to downstream processes. This issue may be addressed using chlorinated water sprays or installing screens that allow foam to pass through.

## 5.5 Description of Pilot Studies

IFAS is a treatment system that is a relatively new technology for the specific purpose of retrofitting existing treatment plants for increased capacity and/or increasing the efficiency of nutrient removal processes. As such, the technology does not have as many case studies or design criteria to size and cost the treatment technology properly. The City of Greensboro, North Carolina, commissioned Hazen and Sawyer in 2008 to study and pilot a full-scale IFAS system at the T.Z. Osborne (TZO) and North Buffalo Creek (NBC) Water Reclamation Facilities (WRFs). In addition to the City's long-term treatment and capacity needs, the City is faced with more stringent nutrient removal requirements as a result of the Jordan Lake rules and pending TMDLs.

The results of these pilot studies can be used to provide performance and operational data. A full scale pilot study was implemented using one treatment train at TZO. Specifically, the objectives of the pilot study were to determine design parameters, kinetic information, operational issues, operational costs, and to gain overall experience in the IFAS treatment system with respect to a conventional five-stage BNR process. The IFAS pilot study implemented three anoxic basins followed by six aerobic basins with fine bubble aeration systems. Additionally, cylindrical and top-of-wall screens were used to prevent media from escaping the reactors. The media chosen were Anox Kaldnes K3 plastic carriers, which filled the first three aerobic basins by 35 percent volume. Table 5-1 provides a summary of initial design parameters used in the pilot study. Figure 5-3 provides pictures of the IFAS pilot study at the TZO WRF.

**Figure 5-3: IFAS Pilot Plant at T.Z. Osborne Water Reclamation Facility**

**Table 5-1: Summary of Initial Design Parameters in Full-Scale Pilot Study**

| Criteria | Value |
|---|---|
| Flow (mgd) | Annual Average – 2.78 mgd<br>Maximum Month – 3.50 mgd<br>Peak Day – 5.47 mgd |
| Total aerobic volume | 1.32 Mgal |
| Aerobic volume with IFAS | 0.66 Mgal (3 cells at 0.22 Mgal each) |
| Minimum aerobic SRT (winter conditions) | 9 days |
| Minimum temperature for design | 14°C |
| Maximum suspended phase MLSS | 2,500 mg/l |
| Maximum RAS rate | 8.3 mgd |
| Maximum flow through IFAS system | 16.7 mgd |
| Minimum protected media surface area | 4.78 M $ft^2$ |
| Maximum headloss through cylindrical effluent screens | 1.5 inches |
| Target ammonia concentration in final IFAS cell | 1 mg/l |

## 5.6 Nitrification / Denitrification Performance

In general, the results of the City of Greensboro pilot testing indicated that the IFAS system was able to nitrify the influent to permit limits. The median TKN load to the IFAS demo plant was 893 lbs•N/day with about 70 percent in the form of ammonia $NH_3$-N. The median overall nitrogen removal was 72 percent. Table 5-2 summarizes the nitrogen species concentrations in the pilot study plant effluent. On average, the IFAS demonstration plant was able to achieve 99 percent ammonia nitrogen removal.

**Table 5-2: Summary of Nitrogen Species in IFAS Demonstration Plant Effluent**

| Nitrogen Species | Average (mg/l) | Maximum month (mg/l) |
|---|---|---|
| $NO_2$-N (nitrite N) | 0.09 | 0.23 |
| $NO_3$-N (nitrate N) | 7.6 | 8.8 |
| $NH_3$-N (ammonia N) | 0.22 | 0.91 |
| Soluble TKN (organic N) | 1.68 | 3.06 |
| Soluble TN (total N) | 9.37 | -- |

Denitrification, however, was limited by the volume of recycle of nitrates to the upstream anoxic cells. It is expected that denitrification rates will increase in full scale IFAS designs with appropriate internal recycle streams. In this study, the maximum month observed soluble TKN was 2.2 mg/l.

According to the 2000 Investigation of Hybrid Systems for Enhanced Nutrient Control report, nitrification rates increase with increasing concentrations of ammonium-N and DO in the bulk fluid. The rate of nitrification is also dependent on the thickness of the stagnant liquid layer external of the biofilm surface and the fraction of the media surface covered by biofilm. These parameters change with different aeration and mixing systems. Examples of nitrification rates obtained from the pilot studies range from 0.4 to 1.0 kg/1000 $m^2$/d for free floating media and from 0.2 to 0.6 kg/d/1000 meters for rope media. Nitrification values differ with the type of media used, as well as the location in the tank.

## 5.7 Phosphorus Removal Performance

While phosphorus removal was not the primary objective of the IFAS pilot plant, significant biological phosphorus removal rates were observed. Phosphorus release occurred in the un-aerated zone indicating some anaerobic activity in the anoxic basins. The phosphates were then taken up in the aerobic IFAS cells and in the downstream aerobic cells (not containing media) to reduce phosphate concentrations in the effluent. The average and maximum month phosphorous species concentrations of the effluent are summarized in Table 5-3**.** It is expected that if more nitrates were recycled back to the anoxic zones, less COD and less anaerobic volume would have been available and phosphorus removal may not have been as significant. The recorded average total phosphorus removal was around 96 percent based on the plant effluent.

In the case of the Greensboro demonstration plant, phosphorus removal was not intended but achieved due to the low nitrate recycle rates which allowed for an anaerobic environment for phosphate accumulating organisms (PAOs). While the IFAS basins did not enhance phosphorus removal, the pilot study illustrated that an IFAS system can be designed to include an aerobic volume and provide effluent that will meet a proposed total phosphorus limit.

**Table 5-3: Summary of Phosphorus Species in IFAS Demonstration Plant Effluent**

| Parameters | Average (mg/l) | Maximum Month (mg/l) |
|---|---|---|
| $PO_4$-P | 0.29 | 0.83 |
| TP | 0.86 | 1.91 |

## 5.8 Operational Challenges

Four major operational issues were found during the pilot testing: foam accumulation, debris accumulation, media retention, and media management. Media were free-floating in the basins, so top-of-wall screens were used to prevent media from escaping the basin. The screens also prevented foam from passing through to the clarifiers and caused foam accumulation on the water surface of each IFAS cell. The screens also trapped debris and caused debris accumulation; however, after the top-of-wall screen was replaced with a vertical bar screen, debris accumulation no longer became an issue. Media retention

was an operational challenge as media got caught upstream in the cylindrical effluent screens twice during the demonstration. The ability to collect and move media for operation and maintenance is important and was found to be an issue during the study.

## 5.9 Summary of Advantages and Disadvantages of IFAS Systems

The advantages and disadvantages of IFAS systems are summarized in Table 5-4**.**

**Table 5-4: Summary of Advantages and Disadvantages of IFAS Systems**

| Advantages | Disadvantages |
|---|---|
| Small footprint – can be used for retrofit. | Increased oxygen supply required. |
| Improved sludge settling (decrease in sludge volume index). | Foam accumulation. |
| Stable nitrification at low temperatures. | Retention of IFAS media required. |
| Increased flux through reactors (e.g., less sensitive to sustained peak flow). | Energy intensive, so high operational costs. |
| Not susceptible to washout. | Proprietary equipment (media). |
| | Very small number of facilities operating with this technology. |

## 6. Moving Bed Biological Reactors

### 6.1 General Description and Applications

The moving bed biological reactor (MBBR) process is an attached growth activated sludge process that uses suspended plastic carrier media within the bioreactor to provide surface area for biofilm growth. MBBRs are classified within a group of processes called mobile bed biofilm reactors. The three types of reactors in this group are fluidized bed biofilm reactors (FBBRs), airlift biofilm reactors (ALBRs), and moving bed bioreactors (MBBRs). MBBRs are distinctive in that they use low density media kept in motion using aeration or mechanical mixers. Media in FBBRs are kept in suspension using high water velocities while ALBRs use gas, or air, to maintain motion. The media in MBBRs are made of polyethylene and are shaped like small cylinders with a crosspiece on the inside, similar to the plastic media carriers used in IFAS systems. A typical IFAS configuration is shown in Figure 6-1.

The primary difference between MBBRs and IFAS systems is that MBBRs do not incorporate return activated sludge. Both systems can be retrofitted in existing activated sludge basins. These systems are primarily used for soluble organic matter removal as well as nitrification. MBBR effluent must undergo pre-sedimentation treatment and must be followed by settling basins where the sloughed off biofilm is separated from the treated water. In general, moving media provide several advantages including the ability to control biofilm thickness, increase mass transfer efficiencies, reduce clogging, and provide high surface areas for biofilm development. Figures 6-2 to 6-4 illustrate moving bed reactor systems and system components.

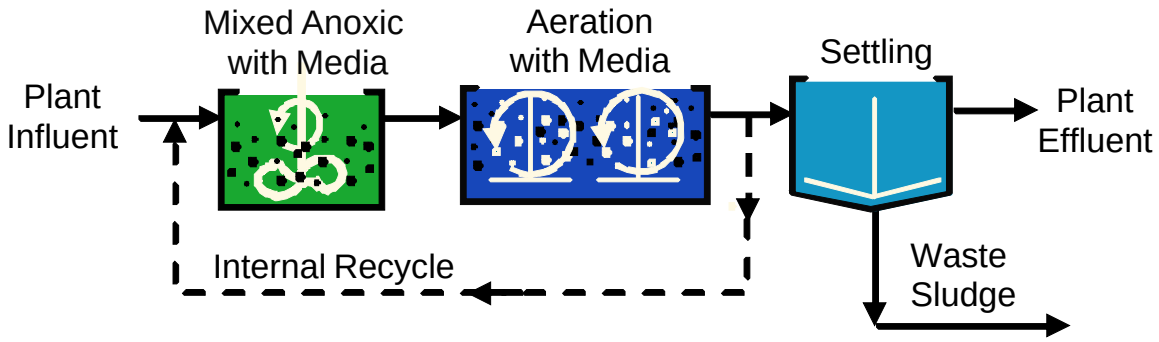


**Figure 6-1: Schematic of the Moving Bed Bioreactor (MBBR) Process**

**Figure 6-2: Aeration Grid for an MBBR System**

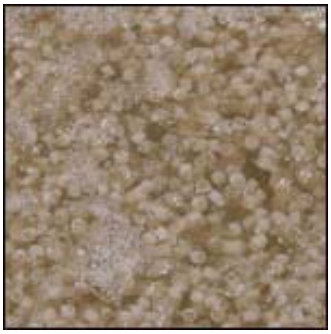

**Figure 6-3: Typical Density of Media Within an MBBR Reactor**

**Figure 6-4: MBBR Nitrification Process in Operation**

## 6.2 Operation

The reactor in the MBBR process can be aerobic, anoxic, or anaerobic. The media is kept completely mixed by coarse bubble aeration (in aerobic zones) or mechanical mixers (in anoxic and anaerobic zones). Similar to IFAS systems with free-floating media, MBBRs require a screen or sieve to be installed at the effluent end of the reactor basin. It is important to keep the media constantly in motion to not clog the screens. The amount of media to install in an MBBR basin is dependent on a number of factors such as the organic and hydraulic loading characteristics, temperature, and the degree of treatment required. An MBBR may be filled up to 70 percent volume with media. Typical DO concentrations in MBBR systems for BOD removal are 2 to 3 mg/l. Higher DO concentrations have not been proven to be beneficial in practice. In terms of settleability, MBBR processes typically require chemicals to be added to improve the settling characteristics of the mixed liquor. This is because it has been shown in previous pilot studies that biofilm reactors with high organic loads produce solids with poor settling properties. Thus, MBBR plants may use chemical polishing or operate at low organic loads to improve the settleability of sludge.

## 6.3 Summary of Pilot Studies

The most common MBBR process is the Kaldnes process which was developed in Norway and for which several application guidelines and design criteria have been developed. It consists of 4 to 8 reactors in series and can achieve nitrogen removal that may range from 70 percent to greater than 85 percent depending on the hydraulic retention time and design configuration. The pre-denitrification/post-denitrification alternative requires an HRT of 6 hours to achieve 70 percent nitrogen removal. The pre-precipitation/post-denitrification alternative may achieve greater than 85 percent nitrogen removal with an HRT of less than three hours.

## 6.4 General Design

While the MBBR design process is site-specific and depends on wastewater characteristics, temperature, effluent sampling procedures, effluent criteria, local energy costs, available land, and whether or not the project is a retrofit, upgrade, or new design, published data may be used for some initial and basic sizing. Table 6-1 provides a summary of published data for the Kaldnes process at 15°C.

When sizing MBBR reactors for nitrification, the reactor volumes are calculated separately for BOD removal and nitrification. Pre-denitrification rates depend on wastewater characteristics, temperature, and the amount of oxygen in influent and recycled wastewater. However, batch tests have shown that if high concentrations of biodegradable soluble COD are present, denitrification rates are high.

**Table 6-1: Typical Design Values for the Kaldnes MBBR Process at 15°C**

| Purpose | Treatment Objective, % Removal | Design Loading Rate, $g/m^2 \cdot d$ | Design Loading Rate at 67% Fill of K1 Carrier, $kg/m^3 \cdot d$ |
|---|---|---|---|
| **BOD removal** | | | |
| High-rate | 75 – 80 ($BOD_5$) | 22 ($BOD_5$) | 7.2 ($BOD_5$) |
| Normal rate | 85 – 90 ($BOD_5$) | 13 ($BOD_5$) | 4.3 ($BOD_5$) |
| Low rate | 90 – 95 ($BOD_5$) | 6.5 ($BOD_5$) | 2.2 ($BOD_5$) |
| **Nitrification ($O_2$ > 5 mg/l)** | | | |
| BOD removal stage [1] | 90 – 95 ($BOD_5$) | 5.2 ($BOD_5$) | 1.7 ($BOD_5$) |
| $NH_4$-N > 3 mg/l | 90 ($NH_4$-N) | 1.0 ($NH_4$-N) | 0.34 ($NH_4$-N) |
| $NH_4$-N > 3 mg/l | 90 ($NH_4$-N) | 0.45 ($NH_4$-N) | 0.15 ($NH_4$-N) |
| **Denitrification** | | | |
| Pre-DN (C/N > 3.5)[2] | 70 ($NO_3$-N) | 0.9 ($NO_3$-N) | 0.30 ($NO_3$-N) |
| Post-DN (C/N) > 2.6)[3] | 90 ($NO_3$-N) | 2.0 ($NO_3$-N) | 0.67 ($NO_3$-N) |

[1] $O_2$ > 3 mg/l.
[2] g $BOD_5$/g $NO_3$-$N_{equiv}$, internal carbon.
[3] g $BOD_5$/g $NO_3$-$N_{equiv}$, external carbon.

## 6.5 Summary of Advantages and Disadvantages of MBBRs

The advantages and disadvantages of MBBR processes are shown in Table 6-2.

**Table 6-2: Summary of Advantages and Disadvantages of MBBRs**

| Advantages | Disadvantages |
|---|---|
| Smaller footprint. | Increased power requirements for aeration, therefore increased operational costs. |
| Can be retrofitted to activated sludge systems for increased capacity or higher quality of effluent. | Higher cost of media. |
| Biomass recirculation not necessary. | Must maintain high oxygen concentration. |
| High effluent quality in terms of BOD and suspended solids. | Increased level of pretreatment with fine screening. |
| | Process sensitive to sustained peak hour flow. |
| | Media replacement. |

# 7. Sequencing Batch Reactors

## 7.1 General Description and Applications

As opposed to conventional activated sludge, sequencing batch reactors (SBRs) achieve both organic removal and settling in the same reactor. Additionally, the wastewater is not continuously discharged into or withdrawn from the reactor. Instead, the wastewater flows into the bioreactor during a fill period. The biological reaction periods are then initiated, followed by the settling period. Clean effluent is then withdrawn from the reactor and the biomass is left idle until the next cycle begins. These five steps may be described as the fill, react, settle, draw, and idle periods. Sequencing batch reactors may also be modified to achieve nutrient removal by providing aerobic, anaerobic, and anoxic conditions within the same tank. SBR systems do not have secondary clarifiers. Therefore, the footprint of an SBR system is generally smaller than that of a conventional system. Figure 7-1 provides an illustration of an SBR process flow diagram for nitrogen and phosphorus removal.

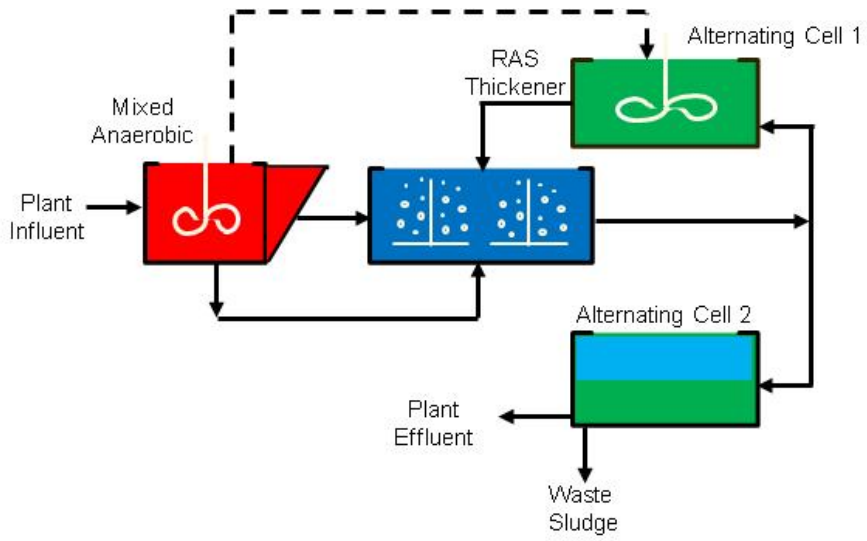


**Figure 7-1: Illustration of an SBR Process Flow Diagram for Nitrogen and Phosphorus Removal**

## 7.2 Operation

To achieve continuous flow with sequencing batch reactors, at least two reactors are required so that while one receives flow, the other is undergoing the treatment process. Three or more reactors may often be required for complete redundancy. In SBR systems, sludge wasting usually occurs during the react phase. Additionally, return activated sludge is not required since the react and settling phases occur in the same basin. Some design considerations for SBRs include the fraction of the tank contents removed during the withdrawal period, as well as the settle, withdrawal, and aeration times.

SBRs operate at a low F:M design ratio, typically 0.07 lb/lb, which is lower than the design F:M in plug flow conventional activated sludge systems. In plug flow systems, nitrification and denitrification take place in separate reactors designed for the kinetics of the required microorganisms (e.g., nitrifiers and denitrifiers). In batch processes, the same reactor is used for nitrification, denitrification, and biological phosphorus removal, resulting in a fixed amount of food to be spread over the same amount of mass of carbon, resulting in a much lower F:M ratio.

Another major difference in the operation of plug flow systems and sequencing batch reactors is the actual oxygen requirement. In a five-stage plug flow process, the reactions that take place in the initial anoxic zone remove a significant amount of organic material (e.g., carbon). Therefore, the aerobic zones are designed to provide the required oxygen to remove any residual carbon and for nitrification. In a batch process, the influent load entering the tank has not undergone any organic removal. Therefore, more oxygen is required to support complete BOD removal and nitrification.

As a result of the process configuration of SBRs, the ability to achieve advanced nutrient removal is more limited in an SBR than a conventional plug flow system. Table 7-1 provides the expected effluent total nitrogen and phosphorus concentration from an SBR.

**Table 7-1: Summary of Expected Effluent Total Nitrogen and Phosphorus Concentration for Sequencing Batch Reactors**

| Treatment Process | Expected Effluent Nitrogen Range | Expected Effluent Phosphorus Range | Comments |
|---|---|---|---|
| Sequencing Batch Reactor | 5 – 8 mg/l | < 2 mg/l | • No control over internal recycles.<br>• Partitioned reactor with alternating cells required.<br>• Equalization preferred to control peak flow. |

## 7.3 Nutrient Removal Performance

Phosphorus removal may be achieved if an anaerobic reaction period follows the initial fill period. The anaerobic cycle is followed by cyclic aerobic and anoxic periods for nitrogen removal. SBRs designed to achieve phosphorus removal require a larger volume than process designs exclusive to nitrogen removal. Additionally, the operation and design of SBRs with phosphorus removal is more complex since anaerobic, anoxic, and aerobic timed phases must be controlled during the reaction period.

## 7.4 Design Criteria

There are four major design criteria provided by the WPC specific to SBR systems, as follows:

- Pre-aeration and flow-equalization basin is required for when the SBR is in the settle and/or draw phases. The only case where this is not required is when multiple SBRs are available and if each SBR basin can handle all peak flow while the other is in the settle or draw mode.
- Surges must be avoided when the SBR is discharging flow to avoid overloading the disinfection system.
- The effluent of the reactor is withdrawn just below the water surface level (or scum level) or by a device that filters out scum.
- Prevailing winds must be considered in scum control.

## 7.5 Summary of Advantages and Disadvantages of SBRs

Table 7-2 provides advantages and disadvantages of sequencing batch reactors.

**Table 7-2: Summary of Advantages and Disadvantages of Sequencing Batch Reactors**

| Advantages | Disadvantages |
|---|---|
| Ability to adjust process timing via PLC in reactor for specific processes (such as aerobic, anaerobic, and anoxic). | Discontinuous discharge and consequent negative effect on downstream processes. |
| High quality effluent when operated properly. | Relatively large reactor volumes. |
| Smaller footprint than conventional activated sludge. | Advanced nutrient removal difficult. |
| No secondary clarifiers and RAS pumping required. | Batch discharge may require post-equalization. |
| May be applied to a wide range of plant sizes. | High peak flow may disrupt performance, therefore influent equalization should be considered in design. |

## 7.6 SBR-MBR Systems

The SBR-MBR system incorporates membrane bioreactors downstream of the SBR basins. Submerged membranes are used in lieu of the traditional settling and effluent decant. The "SMBR" process is actively marketed by Aqua-Aerobic Systems. The SMBR process consists of two reactors. Influent wastewater enters into one reactor at a time. When one reactor is undergoing the react/mix/fill mode, the other is undergoing membrane filtration, equivalent to the "react/draw" mode. Performance parameters and design criteria for the SMBR process in comparison with conventional activated sludge followed by membranes is summarized in Table 7-3. Figure 7-2 provides an illustration of the process operation of an SMBR system.

**Table 7-3: Performance Parameters and Design Criteria of Batch and Continuous Flow Processes**

| Parameter | Batch Process | Continuous Flow Process |
|---|---|---|
| Volume | 0.54 MG | 0.56 MG |
| Hydraulic Retention Time | 13.0 hours | 13.5 hours |
| MLSS Concentration | 6,500 – 8,000 mg/l | 6,000 – 8,000 mg/l |
| F:M | 0.069 lb/lb | 0.10 lb/lb |
| Solids Retention Time | 15.3 days | 17 days |
| Actual Oxygen Required | 5,707 lb/day | 2,400 lb/day |
| Total Reactor Airflow | 3,422 scfm | 800 scfm |
| WAS Flow | 21,439 gpd | 28,000 gpd |
| WAS Rate | 1,788 lb/day | 2,000 lb/day |

One similarity between continuous flow and batch flow MBR operations is that both systems require about 13 hours of hydraulic retention time to achieve total phosphorus and nitrogen removal. Also, the MLSS concentrations are similar in both systems. Differences include lower F:M ratios and increased actual oxygen required in batch processes (based on the same peak load conditions). Another difference is the requirement of chemical feed. Additional carbon must be added to batch processes for denitrification and metal salt must be added for phosphorus removal. Specifically, an SMBR process can produce effluent with 6 mg/l total nitrogen and 3 mg/l total phosphorus with chemical addition. Conventional activated sludge produces an effluent of 4 mg/l total nitrogen and 0.5 mg/l total phosphorus. Table 7-4 provides a summary of the differences between continuous flow and batch processes.

**Table 7-4: Summary of Differences Between Membrane Continuous Flow and Batch Processes**

| Continuous Flow Process | Batch Process |
|---|---|
| Major equipment provided with shelf spares. | Major equipment redundancy provided with shelf spares with the exception of the floating mixers. |
| Dual trains are provided with 100 percent redundancy in reactor design. If one train is removed from service, the second train operates independently. | Dual trains are provided; however, three SBR reactors would be required for 100 percent reactor redundancy. The operation of the membrane system is dependent on the operation of the batch, draw, and fill process. |
| Capital costs are approximately 15 percent less than the batch process. | Capital costs are approximately 15 percent more than the continuous flow process and include a chemical feed system. |
| Operation costs are greater for power, but do not include the annual costs for chemicals. | Operation costs are less for power, but the total is greater if the annual cost for chemical is included. |
| Automated valves only required for the permeate flow for the membrane system. | Automated valves required for influent flow, membrane feed control, RAS flow control, and permeate flow. |

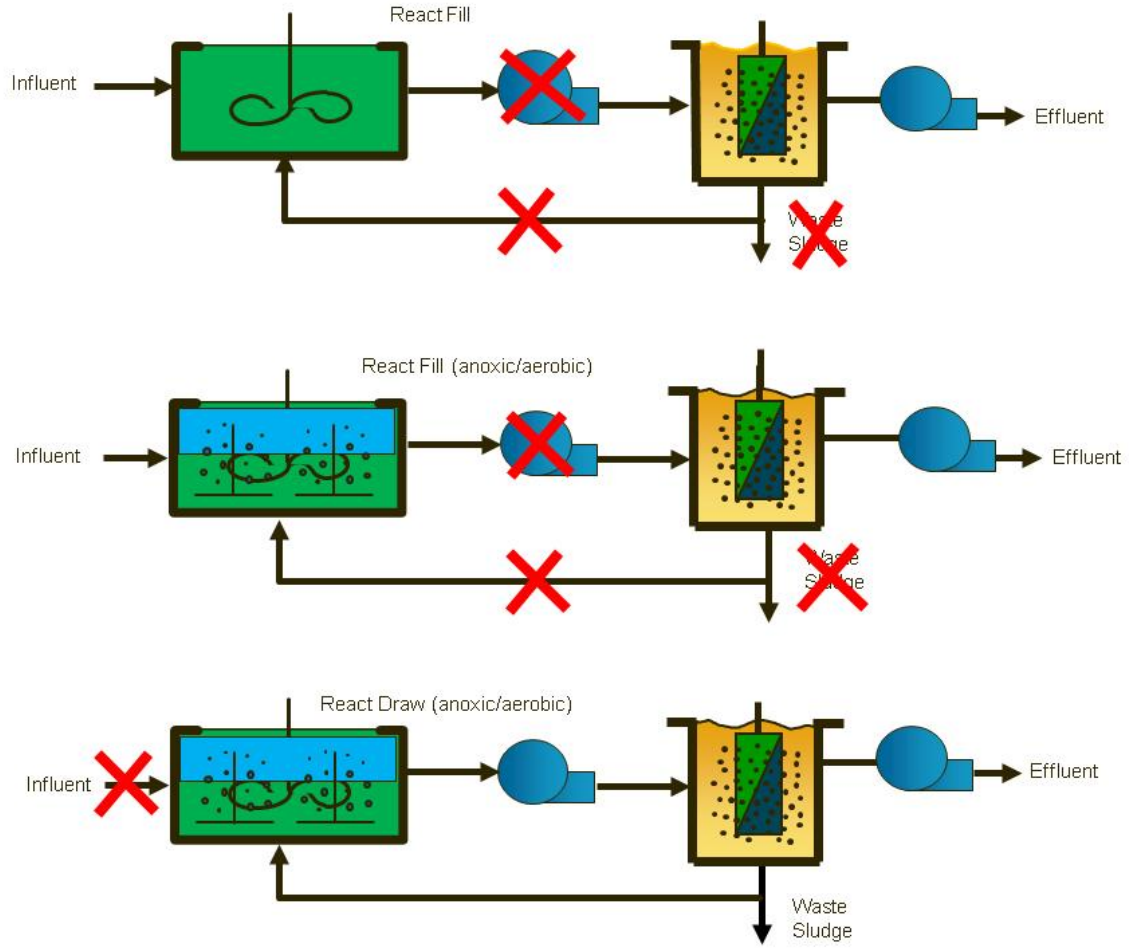


**Figure 7-2: Illustration of the SMBR Process and Operation**

## 8. Sidestream Treatment of Plant Recycle Flow

The nutrient load from internal plant recycles may significantly contribute to the total influent nitrogen and phosphorus load to the biological process. The design of an advanced nutrient removal facility often requires treatment of sidestream recycles in order to reduce the total nutrient load to the biological process, particularly if ultra-low effluent total nitrogen and phosphorus concentrations must be achieved. Typically, the largest nutrient loads from a recycle stream will originate from biosolids management facilities, e.g., filtrate or centrate from mechanical dewatering or gravity thickening. Other recycle streams include filter backwash and plant drain pump stations. There are several approaches that may be used for treatment of sidestream recycles:

- Filtrate Equalization
- Physical-Chemical Treatment
- Biological Treatment
- CASTion Ammonia Recovery Process
- OSTARA Process

At the SCWWTP, detailed sampling of the influent and sidestreams would be required before sidestream removal technologies would be recommended.

### 8.1 Filtrate Equalization

Flow equalization of recycle streams is used to attenuate the loading of nutrients back to the liquid stream process and can be particularly effective when applied to batch dewatering processes. Filtrate flow can be stored and fed back to the liquid stream process at a constant rate or fed back during low diurnal loading periods. Feeding phosphorus rich sidestreams back to the liquid stream process during low influent load periods can lead to reduced biological phosphorus removal performance if adequate carbon is unavailable. The benefits of filtrate equalization include increased secondary process reliability, flexibility in nutrient return to the liquid stream, and greater dissolved oxygen control in the process basins.

### 8.2 Physical-Chemical Treatment

Aluminum and iron salts are commonly used for the chemical removal of phosphorus from municipal wastewater. Physical-chemical treatment cannot be used for nitrogen removal. The most prevalent chemicals used for phosphorus removal are aluminum sulfate ($Al_2(SO_4)_3 \bullet 14H_2O$), commonly referred to as alum, and ferric chloride ($FeCl_3$). Several other compounds can be used for phosphorus removal: ferrous sulfate and ferrous chloride (often referred to as “pickle liquor”, a byproduct of steelmaking), sodium aluminate ($Na_2Al_2O_4$), and polyaluminum chloride (PACl). Ferrous sulfate and ferrous chloride can contain large quantities of hydrochloric or sulfuric acid, which can result in increased alkalinity reduction and pH depression. Therefore, these chemicals are not commonly used. A number of plants were originally

designed for phosphorus removal through lime addition; however, lime addition for phosphorus removal is not commonly practiced anymore due to substantial sludge production and operational and maintenance issues associated with lime handling.

Many wastewater treatment facilities have switched from alum and ferric chloride to sodium aluminate addition. The major benefit of sodium aluminate addition is that it is an alkaline solution and increases the alkalinity and pH of the wastewater, which reduces sodium hydroxide feed requirements. A potential drawback to sodium aluminate addition is that it may raise the wastewater pH above the optimal pH range for chemical phosphorus removal, leading to reduced chemical phosphorus removal efficiency particularly where very low effluent phosphorus limits need to be met. Recent jar tests performed at other facilities have suggested that the use of sodium aluminate for phosphorus removal in the liquid stream is inefficient due to increasing pH at higher doses; however, this phenomenon has not been reported during full scale use. The facilities that are currently adding sodium aluminate have reported greater phosphorus removal efficiency compared to alum addition, which could be due to greater biological phosphorus removal efficiency attributed to increased pH.

## 8.3 Biological Treatment

Sidestream biological treatment should be considered if a reduction in the total nitrogen load returned to the liquid stream is required. Numerous proprietary recycle stream processes are available. Non-proprietary process configurations can provide for similar nitrogen removal from recycle streams. Biological treatment of high ammonia recycle streams is particularly attractive at facilities with high anaerobic digester operating temperatures since many of the process configurations rely on high wastewater temperatures to promote the growth of specific bacteria. The treated recycle flow from some processes can be used to seed the secondary process with nitrifiers under cold weather conditions.

### *8.3.1 Nitrification / Denitrification*

Nitrification and denitrification includes providing for separate sidestream biological treatment of filtrate. An anoxic zone can be placed after the nitrification zone and supplemental carbon can be fed to reduce nitrate concentrations returned to the liquid stream. This process can be arranged in limitless configurations including flow through reactors in parallel with RAS/WAS addition to provide biomass, activated sludge configurations with a clarification step and return sludge pumping, fixed media, fixed film/activated sludge hybrids such as IFAS, sequencing batch reactors, etc. The main purpose of the process is to reduce the ammonia (and nitrate if denitrification is provided) loads returned to secondary processes.

### *8.3.2 Bioaugmentation*

Bioaugmentation processes provide nitrification of filtrate in a separate sidestream reactor and then returns the nitrifying biomass to secondary processes to increase their nitrification capacities. The seeding impact allows the secondary process to be operated at a lower solids retention time, which reduces MLSS

concentrations and solids loadings to the secondary clarifiers and can help protect nitrification performance during cold weather. A portion of RAS or WAS flow is directed to the sidestream reactor to provide biomass for treatment. Bioaugmentation is a well developed, widespread technology that is capable of removing greater than 80 percent of ammonia from a high strength sidestream. Supplemental alkalinity addition is often required for this process.

Sidestream denitrification can also be provided in a bioaugmentation process if anoxic conditions and supplemental carbon are provided downstream of nitrification. This may be particularly beneficial at treatment plants utilizing methanol for denitrification, as methylotrophs will be returned to secondary processes, which could reduce the potential for methylotroph washout and loss of denitrification in a post-anoxic zone of a BNR process.

Proprietary bioaugmentation processes are available including InNitri® (Inexpensive Nitrification) and BABE® (BioAugmentation Batch Enhanced). The InNitri® process is marketed by Mixing and Mass Transfer (M2T) Technologies and includes primary effluent addition to the sidestream reactor instead of RAS or WAS. The BABE® process, developed by DHV and University of Delft (The Netherlands), provides for separate centrate treatment in a SBR. Additional bioaugmentation processes include Prenitrification, BAR (Bio-Augmentation Re-aeration) and MAUREEN (Mainstream Autotrophic Recycle Enabling Enhanced N-removal).

*8.3.3 Nitritation / Denitritation*

In the Nitritation process, the ammonia load in the sidestream is oxidized to nitrite prior to return to the liquid stream. Ammonia oxidation is stopped at the nitrite step by operating the process at an elevated temperature (30 to 40°C) and low SRT (1 to 2 days). At higher temperatures, the ammonia-oxidizing bacteria grow faster than the nitrite-oxidizing bacteria; therefore, the slower nitrite oxidizers are washed out of the system. Limiting ammonia oxidation to nitrite reduces the amount of oxygen required and reduces aeration energy compared to full nitrification to nitrate. Another potential advantage is reduction in the carbon required to reduce nitrite to nitrogen gas compared to reducing nitrate.

Although this process has been widely established in Europe, North American installations are limited. This process can remove more than 90 percent of the ammonia available in the sidestream. Supplemental alkalinity addition is usually required for this process, and external heating may be necessary depending on filtrate and ambient temperatures. The SRT, pH and temperature must be carefully controlled in this process to prevent the growth of nitrite-oxidizing bacteria.

Denitritation is the reduction of nitrite directly to nitrogen gas. A sidestream anoxic zone and supplemental carbon addition can be provided downstream of the nitritation zone to provide for denitritation. This process will also reduce supplemental carbon requirements compared to conventional nitrification and denitrification. The SHARON® (Single Reactor for High activity Ammonia Removal Over Nitrite) process, marketed by Mixing and Mass Transfer (M2T) Technologies, is a proprietary combined nitritation and

denitritation process which occurs in a single reactor and is capable of reducing filtrate total nitrogen concentrations by 80 percent.

#### *8.3.4 ANAMMOX*

The ANAMMOX® (ANaerobic AMMonium OXidation) process is a variation of the Nitritation/Denitritation process. This process was originally configured as an initial nitritation reactor followed by an un-aerated reactor (SHARON®/ANAMMOX® process). The Nitritation process provides for partial nitritation, and typically aeration is limited to convert only 50 percent of the ammonia to nitrite. The ammonia/nitrite mixture is directed to the ANAMMOX® reactor, where autotrophic bacteria (Anammox bacteria) reduce the ammonia/nitrite mixture to nitrogen gas. Ammonia is used as an electron donor under anoxic conditions, and the nitrite is used as the electron acceptor. Supplemental carbon addition is not typically required for this process if it is properly controlled. Supplemental alkalinity addition is required.

Installations of ANAMMOX® process are limited worldwide. There are five known full-scale facilities worldwide, none of which are in North America. Careful temperature control is crucial to the process, and must be maintained near 36°C. The Anammox bacteria are very slow growing, and a comparably large reactor volume must be provided to avoid washout. Total nitrogen removal rates greater than 80 percent may be achieved.

The ANAMMOX process was developed at the University of Delft (The Netherlands), and Paques Engineering holds the license to the ANAMMOX process. Several different proprietary processes have been developed including DEMON (DEamMONification), CANON (Completely Autotrophic Nitrogen removal Over Nitrite) and OLAND (Oxygen Limited Autotrophic Nitrification/Denitrification). The major differences in these processes relate to the control strategy used to maintain optimal process conditions.

### 8.4 CASTion Ammonia Recovery Process

The CASTion Ammonia Recovery Process (ARP®) is a proprietary sidestream treatment process marketed by ThermoEnergy. This process is specifically intended to reduce ammonia in solids treatment process recycle streams. Reverse Controlled Atmospheric Separation Technology (RCAST®) separates ammonia from the wastewater. This process involves addition of sodium hydroxide to raise the filtrate pH and convert soluble ammonium ($NH_4^+$) to aqueous ammonia gas ($NH_3$(aq)) and then providing high temperature, low pressure conditions to drive the ammonia gas out of solution. Sulfuric acid solution is added with the ammonia gas to form a stable ammonium sulfate solution. An ion-exchange process further removes ammonia from the filtrate. The manufacturer claims that filtrate ammonia concentrations can be reduced to less than 1 mg/l with this technology.

Significant pretreatment of the filtrate will likely be required with this technology. Maceration, screening, dissolved air flotation, filtration, ultraviolet disinfection, and softening of the filtrate stream would likely be necessary prior to this process implementation, which in turn may create substantial reject streams to the front of the plant. Thus, there may be significant operation and maintenance concerns due to the stringent

pretreatment requirements. The CASTion ARP process does not appear to have any cost benefit in comparison to providing additional supplemental carbon feed to tertiary filters. Limited full scale operational history exists for this process, so generally the CASTion ARP process is not recommended for full-scale consideration.

## 8.5 OSTARA Process

The OSTARA process is a proprietary phosphorus removal technology in which appropriate stoichiometric doses of magnesium chloride and sodium hydroxide are added to the dewatering filtrate, combining ammonia and orthophosphate in the filtrate to precipitate struvite pellets. A small reduction in ammonia load occurs through this process as well. The struvite pellets are subsequently marketed by OSTARA as fertilizer under the brand name Crystal Green®.

The OSTARA process is a feasible application for facilities that are operating with advanced and optimized biological phosphorus removal, anaerobic digestion is used for sludge stabilization, and most, if not all, digested sludge is sent to dewatering. The OSTARA process is primarily focused on phosphorus removal; however, this process may also achieve some nitrogen removal, which will ultimately have a positive impact on the liquid train. Aeration demand, alkalinity addition, and supplemental carbon feed rates would be expected to be reduced.

Advantages of the OSTARA process are as follows:

- Reduction in ferric chloride feed in the plant liquid stream.
- Production of a marketable fertilizer.
- Multiple procurement options.
- Targeted application for specific wastewater characteristics.

Disadvantages of the OSTARA process include:

- Newer technology.
- High capital cost.
- Proprietary process.
- Requires equalization storage.

There are two ways in which OSTARA equipment can be procured. The first way is through an outright capital purchase option in which the owner would pay OSTARA a lump sum and then receive annual credits for the fertilizer produced. Under this option, all operation and maintenance would be the responsibility of the owner. Under the second treatment fee procurement option, OSTARA will provide the necessary equipment, maintain the facility, and charge the owner a fee for operating the facility. The fertilizer produced would be owned and marketed by OSTARA.

Sidestream Wet Weather Peak Flow Treatment

## 8.6 Overview of Combined Sewer Overflows

The City has experienced significant wet weather challenges in recent years. Peak instantaneous flow to the SCWWTP has exceeded three times the plant design flow. The purpose of this section is to explore some of the wet weather techniques and technologies that may be applicable to the City's specific issues. Many of these methodologies are similar to those used for combined sewer overflow systems.

Sewer overflows present water quality issues, such as fecal coliform and BOD concentrations as well as aesthetic impacts in areas where overflows occur. EPA recommends several technology-based and water-based control methods. The elements of technology-based and water-based control plans are summarized in Table 9-1. The five types of wet weather abatement technologies described in this section are inflow control, green infrastructure, storage, treatment, and solids and floatables control.

**Table 9-1: Summary of Technology-Based and Water Quality-Based Wet Weather Control Methods**

| Technology-Based | Water Quality-Based |
|---|---|
| Proper operation and regular maintenance. | Characterization, monitoring and modeling. |
| Maximization of storage in the collection system. | Public participation and agency interaction. |
| Review and modification of pretreatment requirements. | Consideration of sensitive areas. |
| Maximization of flow to the treatment plant. | Evaluation of alternatives. |
| Control of solid and floatable materials. | Cost / performance considerations. |
| Pollution prevention programs to reduce contaminants. | Operational plan. |
| Public notification. | Maximizing treatment at treatment plant. |
| | Implementation schedule. |
| | Post-construction compliance monitoring. |

## 8.7 Inflow Control

Inflow control minimizes the volume and decreases the peak flow of stormwater entering the sewage system. Examples of inflow controls include stormwater detention, street storage of stormwater, water conservation, and infiltration and inflow (I/I) reduction. Stormwater detention is the diversion of stormwater along drainage routes to surface storage basins or detention ponds. This reduces the volume of

stormwater entering catch basins by diverting a portion of it to be evaporated or percolated into the groundwater. Generally, stormwater detention is applicable to small land areas of up to 75 acres and non-urban areas. Street storage of stormwater uses flow restriction devices to retain stormwater on roadways. This control method may cause street flooding and promote unsafe road conditions and damage to roadway surfaces and is not recommended in urban areas.

Water conservation is a control method used in reducing flows to the wastewater treatment plant. Reduction in dry weather flows consequently reduces wet weather flows. Examples of water conservation measures include installation of low flow fixtures, public education to reduce water use, leak detection and correction, and general public education programs.

Another inflow control mechanism is the reduction of infiltration and inflow (I/I), which is additional flow that enters the wastewater collection system through leaking pipe joints, cracked pipes, and manholes. The City has been actively pursuing I/I measures in the collection system. Additionally, flow monitors have been installed throughout the collection system.

## 8.8 Green Infrastructure

Green solutions include best management practices (BMPs) such as the implementation of swales, green roofs, bio-infiltration, and permeable pavements to encourage stormwater infiltration. Green infrastructure promotes the natural hydrologic cycle using infiltration, evaporation, and reuse, thereby reducing the volume of stormwater runoff. Common green solutions are described as follows:

- Green roofs – Installing green roofs is the addition of pre-cultivated vegetation mats on rooftops to capture rainfall.
- Enhanced tree pits – Enhancing tree pits is the addition of trees and plants at curb inlets to absorb, treat, and store rain water.
- Bio-infiltration – Bio-infiltration uses plants in a landscaped area to uptake and infiltrate rain water to groundwater sources.
- Vegetated swales – Vegetated swales are constructed vegetated channels used for the drainage of rain water and the promotion of infiltration.
- Blue roofs – Implementing blue roofs is the temporary storage of rain water on rooftops.
- Subsurface detention systems – Subsurface detention systems are excavated trenches designed to allow stormwater infiltration.
- Pocket wetlands – Pocket wetlands are constructed shallow marsh systems designed to collect and treat stormwater through infiltration and plant uptake.
- Porous and permeable pavements – Porous and permeable pavements use surface material that allows infiltration of rain water to the soil.

- Rain barrels – Rain barrels are barrels placed at the end of a roof downspout to capture runoff from roofs.
- Cisterns – Cisterns are tanks that store rain water for non-potable reuse purposes.

It may be to the City's advantage to implement several BMPs in drainage basins with known stormwater issues to reduce runoff volume and pollutant loading in that watershed. The implementation of the best available technology (BAT) may provide opportunities to negotiate additional effluent flow discharge into the West Fork Stones River.

## 8.9 Storage and Conveyance

Another wet weather control method is to use retention facilities to capture and release excess flow during wet weather events. While one advantage of retention facilities is that they typically have low operation and maintenance costs, one drawback is the large footprint these structures require. Specific examples of retention facilities include closed concrete tanks, storage pipelines/conduits, and tunnels.

Closed concrete tanks generally have odor control systems, washdown/solids removal systems, and access for cleaning and maintenance of the tank. They may be constructed so that the top surface can be used in parks, playgrounds, or other public facilities.

Pipelines or conduits can decrease overflows by conveying and storing flow during a rain event. Flow-control devices may be used to discharge flow to the treatment plant after wet weather events. While one advantage of storage pipelines is that a small right-of-way is required for construction, a disadvantage is that large diameter pipelines are required to convey and store large volumes of flow. Other disadvantages include screening of stored flow, grit and screenings accumulation in the storage vessel, and odors.

Tunnels are similar to storage pipelines except they cause minimal surface disruption in their construction. Excavation for tunnel construction is deep and does not have high impacts on traffic. However, the feasibility in using tunnels is dependent on the geology of a certain area. Examples of places that have used tunnels in wet weather control plans include Chicago, Illinois; Rochester, New York; and Richmond, Virginia.

# 9. Biosolids Treatment and Disposal

## 9.1 Murfreesboro Biosolids Treatment and Disposal

The City designed and commissioned a biosolids handling facility in 2006. The biosolids design consists of aerobic solids holding tanks and self-contained rotary presses for dewatering. According to the *Preliminary Engineering Report* (SSR, May 2008), the rotary presses typically produce sludge of approximately 14 percent solids but may be optimized to achieve a higher percentage solids. Press filtrate is returned to the plant influent pump station. Dewatered solids are disposed in a local landfill. Landfill disposal is a very economical alternative for the City. The City agreed to treat the landfill leachate in exchange for a waiver of landfill tipping fees.

The City is not actively pursuing other biosolids management options. However, in the event the landfill closes or regulations require an alternative biosolids disposal method, there are many options available to the City for Class A or Class B biosolids treatment. This section describes the options that could be available to the City in the future.

## 9.2 Class A and Class B Biosolids

The sludge handling processes chosen and implemented depend on the sludge disposal method and its associated regulations. Treated sludge may be divided into Class A or Class B biosolids. Class A biosolids do not contain detectible levels of pathogens, must meet strict vector attraction requirements, and must have low metals contents. Additionally, Class A biosolids must meet specific criteria so that they may be used in certain applications. Class B solids have been treated but still contain detectible levels of pathogens. Class B biosolids have less treatment requirements and are usually applied to agricultural land or to landfills. The buffer requirements and disposal limitations are different with both categories of biosolids. Table 10-1 contains the pathogen treatment processes recognized by the EPA to significantly and further reduce pathogens in biosolids. The pathogen reduction requirements for both Class A and B biosolids from the EPA's 40 CFR 503 are summarized in Table 10-2.

**Table 10-1: Pathogen Treatment Processes**

| Processes to Significantly Reduce Pathogens | Processes to Further Reduce Pathogens |
|---|---|
| Aerobic digestion | Composting |
| Air drying | Heat Drying |
| Anaerobic digestion | Heat treatment |
| Composting | Thermophilic aerobic digestion |
| Lime stabilization | Beta ray irradiation |
| | Gamma ray irradiation |
| | Pasteurization |

**Table 10-2: Class A and B Requirements for Pathogen Reduction**

| Class of Biosolids | Class Requirement | Example of Alternative to Achieve Requirement |
|---|---|---|
| A | Either the density of fecal coliform in the sewage sludge shall be less than 1,000 most probable number (mpn) per gram of total solids (dry weight basis);<br>Or, the density of *Salmonella* sp. bacteria in the sewage sludge shall be less than 3 mpn / 4g of total solids (dry weight basis) at the time the sewage sludge is used or disposed or at the time the sewage sludge is prepared for sale or given away in a bag or other container for application to the land. | The pH of the sewage sludge shall be raised to above 12 and shall remain above 12 for 72 hours;<br>The temperature of the sewage sludge shall be above 52°C for 12 hours or longer during the period that the pH of the sewage sludge is above 12;<br>At the end of the 72 hour period during which the pH of the sewage sludge is above 12, the sewage sludge shall be air dried to achieve a percent solids in the sewage sludge greater than 50%. |
| B | The geometric mean of the density of fecal coliform in the samples of the sewage sludge that is used or disposed shall be less than either 2,000,000 mpn per gram of total solids (dry weight basis) or 2,000,000 Colony Forming Units per gram of total solids (dry weight basis). | Sewage sludge that is used or disposed shall be treated in one of the processes to significantly reduce pathogens. |

## 9.3 Biosolids Disposal Options

Disposal options for processed sludge include landfill application, land application, and incineration. Biosolids may be applied in monofills or in municipal solid waste landfills that are permitted to accept wastewater treatment residuals. Dewatering is commonly required prior to landfill application to avoid leachate production and stabilization may be required depending on the landfill's acceptance policy. Other requirements for the landfill application of biosolids depend on state or local regulations.

Land application options may apply to agricultural land, forested land, disturbed land, and dedicated land disposal sites. Several regulations and design criteria are associated with the land application of sludge. Pollutant limits for land applied sludge provided by the EPA's 40 CFR 503 are summarized in Table 10-3. The ceiling concentration in column (1) applies to any sewage sludge that is land applied. If sewage sludge is applied to agricultural land, forest, a public contact site, or a reclamation site, the cumulative loading rate for each pollutant cannot exceed those in column (2) or the concentrations of each pollutant cannot exceed those in column (3). Also, if sewage sludge is sold or given away in a bag or other container for land application, the concentration of each pollutant cannot exceed those in column (3) or the

product of the concentration of each pollutant and the annual whole sludge application rate cannot exceed the pollutant loading rates in column (4).

**Table 10-3: Pollutant Limits for Land Application**

| Pollutant | (1) Ceiling Concentration (mg/kg) | (2) Cumulative Pollutant Loading Rate (kg/ha) | (3) Monthly Average Concentration (mg/kg) | (4) Annual Pollutant Loading Rate (kg/ha per 365 day period) |
|---|---|---|---|---|
| Arsenic | 75 | 41 | 41 | 2.0 |
| Cadmium | 85 | 39 | 39 | 1.9 |
| Copper | 4300 | 1500 | 1500 | 75 |
| Lead | 840 | 300 | 300 | 15 |
| Mercury | 57 | 17 | 17 | 0.85 |
| Molybdenum | 75 | NA | NA | NA |
| Nickel | 420 | 420 | 420 | 21 |
| Selenium | 100 | 100 | 100 | 5.0 |
| Zinc | 7500 | 2800 | 2800 | 140 |

## 9.4 Moisture Content Reduction Processes

Sludge accumulated throughout the treatment process is collected and must be processed before it may be disposed. Since untreated sludge is primarily composed of water, one of the primary purposes of sludge processing is to reduce water content and volume prior to disposal. Examples of such processes include thickening, conditioning, dewatering, and drying. Thickening is a process in which the solids content in sludge increases generally by physical means. Examples of thickening methods include settling, flotation, centrifugation, gravity belt, and rotary drum. Following the thickening process, biosolids may be chemically or thermally conditioned to improve its dewatering characteristics.

Dewatering is a process that typically follows conditioning as it reduces the moisture content and volume of sludge and biosolids in order to decrease handling and transportation costs associated with volume. Also, dewatering is required prior to most disposal methods such as landfill application, composting, and incineration. Dewatering can be achieved using centrifuges, belt-filter presses, sludge drying beds, or lagoons.

In addition to dewatering, thermal drying is a process that increases the percent solids of residuals. Specifically, it uses thermal energy to evaporate the remaining water and produces sludge that ranges from 90 to 96 percent solids, a product of far greater percent solids than dewatered sludge. The benefits of drying sludge include reduced transportation costs, pathogen reduction, and improved storage characteristics. There are two major categories for heat drying systems based on how the thermal energy

is applied: direct and indirect drying systems. In direct drying systems, the heat transfer medium, usually heated air, comes in direct contact with the residuals, and uses convection as the principal drying mechanism. Indirect heat drying systems use a heat transfer medium (steam, hot water, thermal oil) that is physically separated from the biosolids while thermal energy is transferred across a barrier with high heat conductivity. In this case, the biosolids are heated by contact with the hot metal surface of the barrier and do not come in direct contact with the heat transfer medium.

The four types of thermal drying technologies applicable to wastewater residuals are described as follows:

- Rotary drum style thermal dryers – The rotary drum style thermal drying technology is based on evaporation of the water by direct contact of the biosolids with a stream of hot air. Hot air is generated in a furnace at temperatures of about 800 to 1,000°F and is taken to the rotary drum where the hot air comes into direct contact to a blend of dewatered residuals and a dried product recycle stream.
- Paddle style thermal dryers – The paddle style thermal drying technology is based on evaporation of water by indirect contact of the dewatered residuals across a metal plate with a thermal transfer fluid such as steam or thermal oil. The dewatered residuals are collected and routed to the thermal dryer receiving bin and are then pumped to the head of the paddle dryer assembly. The paddle dryer consists of counter-rotating steel paddle disks mounted over an insulated dryer shell. The heat transfer medium is pumped into the paddle assembly which is rotated into the bed of drying residuals. The temperature of the heat transfer material ranges from 420 to 450°F.
- Belt style thermal dryers – Belt style thermal dryers are a direct contact type of thermal dryer where the hot air is circulated in a rectangular box through and over the dewatered cake residuals moving through the enclosure on a horizontal belt. Biosolids generally move through a series of drying chambers during processing before they are discharged into a hopper. Thermal energy is provided in each chamber by a hot air recirculation loop. The hot air is heated by indirect contact with steam, hot water, thermal oil, or hot air in an external heat exchanger. The drying temperature of the belt is typically kept at 300°F at the inlet of the dryer and 210°F at the belt discharge zone; the sludge is heated to about 170°F prior to discharge. The relatively low drying temperatures present some advantages such as a less odorous exhaust steam and smaller chances of accidental combustion and ignition than in other drying methods.
- Fluid bed style thermal dryers – The fluid style thermal drying technology is based on evaporation of water by indirect contact of the biosolids across a heat exchanger in the fluid bed. The heat exchanger contains a thermal transfer fluid which is used to transfer thermal energy to the product in the dryer reactor. During this drying process, the biosolids are pumped from the receiving bin to the fluidized bed thermal dryer consisting of three primary operating zones: the bottom zone, the middle zone, and the top zone. The bottom zone contains a hot windbox for uniform distribution of heated air across the base of the fluidized bed dryer system. The middle zone consists of a heat exchanger

imbedded in the fluidized material. The typical operating temperatures for the heat transfer materials ranges from 410 to 480°F. This is also where the biosolids are injected into the thermal dryer. The top zone is located above the fluidized bed and is used to collect the fluidizing gas.

## 9.5 Stabilization Processes

Other processes such as digestion and composting are used to treat or stabilize the organic matter in the sludge. Specifically, the stabilization of sludge is a process that minimizes the potential for odor generation, destroys pathogens, provides uniform product characteristics, and reduces the vector attraction potential.

### *9.5.1 Anaerobic Digestion*

Anaerobic digestion is a common stabilization process in which the volatile solids in the sludge are converted to digester gas and water. Specifically, there are three stages of anaerobic digestion. The first is when organics, cellulose, proteins, lignin, and lipids are converted to soluble fatty acids, alcohol, carbon dioxide, and ammonia. The second stage occurs when the products of the first stage are converted to acetic acid, hydrogen, carbon dioxide, and other low molecular weight organic acids. The third stage is the methane production stage in which methane-forming bacteria convert hydrogen, carbon dioxide, and acetate to methane. The environment in an anaerobic digester is highly reduced and microbe-rich and no dissolved oxygen or nitrate is present.

The three major types of anaerobic digestion are low-rate, high-rate, and two-stage, described as follows:

- Low-rate anaerobic digestion – Low-rate digesters are also known as standard-rate or conventional anaerobic digesters. Characteristics include low organic loading rates, no mixing, and detention times of 30 to 60 days. Low-rate digesters have typically been used in small wastewater facilities with capacities less than 1 mgd. However, its use has significantly decreased in recent years.
- High-rate anaerobic digestion – High-rate anaerobic digesters operate at either mesophilic (90 to 100°F) or thermophilic (120 to 135°F) conditions. High-rate process characteristics include heating, auxiliary mixing, thickening, and uniform feeding. The high-rate digestion process allows for smaller digester tank volumes, increased loading rates, and shorter residence times.
- Two-stage anaerobic digestion – Two-stage anaerobic digestion is a high-rate system that divides the fermentation and solids-liquid separation into two digesters operated in series. While the first digester is designed as a high-rate stabilization system, the second is solely used for solids-liquid separation which does not have heating or mixing unless it is to be used as a standby digester. One issue with two-stage anaerobic digestion is that

digested biosolids may not settle well in the second stage resulting in high concentrations of suspended solids in the supernatant.

The digester gas product typically consists of 65 percent methane and 35 percent carbon dioxide with a heating value of about 600 BTU/CF. The energy in digester gas may be recovered and used in several beneficial ways including electrical power generating systems. The components of an anaerobic digestion system include the reactor tank, microorganisms, mixing system, and heating system.

*9.5.2 Aerobic Digestion*

Aerobic digestion is another stabilization option which provides the destruction of organic compounds and the reduction of pathogens within biosolids by aerobic biological mechanisms. The objectives of aerobic digestion is to produce a stabilized product by oxidizing organisms and other biodegradable organics, reduction of mass and volume, reduction of pathogen organisms, and conditioning for further processing. Some disadvantages of aerobic digestion is the relatively high energy requirement associated with oxygen transfer, reduced efficiency during cold weather, relatively poor dewatering characteristics of solids after digestion, and the difficulties in producing a consistent Class B solids. The detention times to achieve 40 to 45 percent reduction in volatile solids range from 10 to 12 days at an operating temperature of approximately 20°C. Some variations of aerobic digestion include the pure oxygen aeration and thermophilic aerobic digestion processes.

*9.5.3 Alkaline Stabilization*

Alkaline stabilization is a method in which alkaline materials are added to raise the pH level to make conditions unfavorable for the growth of pathogens. Alkaline stabilization can be used to achieve the minimum requirements for Class A and Class B biosolids with respect to pathogens. While alkaline stabilization uses pH to target pathogen inactivation, alkaline pasteurization uses temperature for the same purpose. Using both alkaline stabilization and pasteurization, Class A biosolids that meet the 40 CFR 503 Class A pathogen requirements may be produced. Specifically, Class A requirements may be achieved when the pH of the mixture is maintained at or above 12 for at least 72 hours, with a temperature of 52°C maintained for at least 12 hours. Class B requirements may be met if the pH of the mixture of biosolids and alkaline materials is at least 12 after two hours of contact. One drawback to the alkaline stabilization process is the inevitable generation of ammonia that occurs as a result of changes in pH, resulting in capture and treatment challenges, and may result in odor complaints.

*9.5.4 Composting*

Another way to decompose or breakdown the organic matter in sludge is a biological process known as composting. Aerated static pile composting is a specific composting method in which biosolids are mixed with coarse stable substrates, such as wood chips, and formed into piles to decompose. The compost mixture piles are typically 6 to 8 feet high, 20 to 25 feet wide, and 75 to 90 feet long. The piles are aerated using blowers connected to perforated pipes below the piles. A one foot-long layer of wood chips surround

the aeration pipes to promote uniform distribution. The piles are also covered with a 0.5 to 0.75 foot layer of recycled cured compost or wood chips for insulation.

The two most common types of aerated static piles are positive pressure and negative pressure piles. Positive pressure piles blow air from the bottom of the pile and exhaust through the top and sides while negative pressure piles pull air through the piles and discharge the exhaust through a blower to allow air to be biofiltered. It is important to provide enough oxygen to the piles so that aerobic decomposition is maintained. Additionally, the temperature must be high enough so that pathogens and weed seeds are killed but microorganisms are not. While aerated static pile composting was originally developed for outdoor sites, most facilities are now covered or fully enclosed. A typical composting period is 21 to 28 days, after which the piles are broken down and screened for non biodegradable contaminants. The screened compost is left in a curing pile for 30 more days to further stabilize and prevent odors from developing. The product may then be sold as mulch, soil conditioner, or a soil amendment. The advantages and drawbacks in using aerated static pile composting instead of other solids handling processes are provided in Table 10-4. Other types of composting include aerated window composting, horizontal agitated bin systems, and silo systems.

**Table 10-4: Advantages and Disadvantages in Aerated Composting to Other Solids Handling Processes**

| Advantages | Disadvantages |
|---|---|
| Adaptability to various bulking agents. | Requires more resources to operate and is labor intensive. |
| Flexibility to handle changing feed conditions and peak loads. | Large area required for composting, screening and curing. |
| Relatively simple mechanical equipment and operation. | Odor generation can be problematic. |
| Compost production in about three weeks. | Large surface area operation can make odor mitigation problematic and costly. |
| A negative pressure air system with a biofilter can contain odors. | |
| Controlled conditions can produce a high-quality, marketable compost in 20 to 30 days. | |

*9.5.5 Incineration*

Incineration, or thermal oxidation, of biosolids is a disposal option practiced across the United States. This is done using either multiple hearth furnace (MHF) or fluidized bed thermal oxidation (FBTO) processes. In a fluid bed thermal oxidizer, water is evaporated and volatile organic materials are combusted reducing odor formation and producing low quantities of inert ash. The fluid bed reactor is a vertically oriented reactor with an outer shell made of steel. A 2.5 foot layer of sand rests upon a refractory-lined grid at the base of the furnace.

There are two general configurations for how the fluidized air is injected into the furnace. The first is the hot windbox design in which the combustion air is preheated by passing through a heat exchanger where heat is recovered from the hot flue gases. The second design is when ambient air is injected directly into the furnace from a cold windbox. Of the two designs, the hot windbox is more thermodynamically efficient. The biosolids are fed to the furnace at the lower portion. As the air is injected through nozzles at the base of the furnace, it simultaneously fluidizes the bed of hot sand and incoming biosolids. Combustion occurs within the fluidized bed and within the area above the fluidized bed. Fluidized beds typically achieve complete combustion with 20 to 50 percent excess air with residence times of 2 to 5 seconds. The incinerated biosolids become fine ash particles which are carried out at the top of the furnace.

The FBTO process is becoming more popular and is the preferred method because it has higher thermal destruction efficiencies, increased process control and process flexibility, high system reliability, and reduced air emissions rates when compared to the multiple hearth processes. The major sub-systems of a fluid bed thermal oxidation system are as follows:

- Fluid bed reactor – This is the reactor in which the combustion takes place.
- Primary heat exchanger – The primary heat exchanger is used to pre-heat the combustion in the hot windbox design to provide an operating temperature of 1,200°F.
- Secondary heat exchanger – The secondary heat exchanger is used to reduce the gas stream heat prior to downstream air pollution control equipment and simultaneously capture heat to be used to raise the exhaust stack temperature for plume suppression.
- Venturi scrubber and tray condenser – The Venturi scrubber and tray condenser is a set of air pollution control equipment used in FBTOs. This is where the bulk of the particulate material in the exhaust gas stream is removed.
- Wet electrostatic precipitator – This is another type of pollution control equipment that can further remove particulates from the exhaust gas stream which may result in lower exhaust gas metals concentrations.
- Granular activated carbon reactor (GAC) – The GAC reactor may primarily be used to reduce mercury emissions if such treatment is required to meet the allowable limit under 40 CFR 60.

- Fluidizing blower – This is the main fluidizing blower which provides combustion and fluidizing air flow to the fluid bed reactor.
- Make-up sand storage and feed – Fluidizing sand storage and feed systems are required to provide make-up sand to the fluidized bed to replace sand lost during operation.
- Pre-heat fuel feed and combustion equipment – This consists of fuel oil storage and feed equipment, a pre-heat burner, and a pre-heat combustion air blower used to bring the reactor up to operating temperature prior to the introduction of residuals.
- Dewatered cake storage and feed equipment – Storage and feed equipment is used to store the dewatered biosolids before it is pumped into the fluid bed reactor.
- Ash handling and dewatering equipment – The wet ash produced by the air pollution control system must be handled and is typically thickened and dewatered.
- Process monitoring and controls equipment – This type of equipment consists of instruments and control devices which provide general process control and process monitoring for regulatory reporting.

It should be noted that EPA recently issued draft regulations for sewage sludge incinerator emissions. These rules were scheduled to be promulgated in January 2011 with compliance required five years from promulgation; however, the rules have been postponed. The proposed emission limits for new sewage sludge incinerators are unattainable for conventional scrubbing systems. This regulation would also effectively eliminate incineration as a biosolids option.

## 10. Summary of Treatment Technology Evaluation

The treatment technologies presented in this TM will provide a wide and overlapping range of effluent quality. There are several factors to consider during the selection of a treatment technology for a particular application: a plant's influent characteristics, the effluent limits specified in the permit, the treatment reliability and redundancy required to consistently achieve permit limits, flexibility and adaptability of the system, operability, energy efficiency, capital costs, operation and maintenance costs, the potential for future regulatory action, and physical constraints (size of facility, land availability, etc.). Extended aeration oxidation ditches, conventional activated sludge for advanced nutrient removal, submerged membrane bioreactors, integrated fixed-film activated sludge, moving bed biological reactors, and sequencing batch reactors are technologies that have been used for both surface water discharges and reclaimed water use applications in the United States.

Inherent with each technology are advantages and disadvantages to the process and/or operation and maintenance. Effluent requirements are usually the primary factor in the selection of a treatment technology; however, more than one treatment technology could be applicable to a particular situation. In this case, capital and operation and maintenance costs should be factored into the selection of a treatment process or technology. Additionally, other non-monetary factors should also be considered, such as process flexibility and ancillary treatment needs (e.g., influent equalization). Table 11-1 provides a summary of the operation and process issues discussed for each of the six treatment technologies evaluated in this TM.

**Table 11-1: Summary of Operation and Process Issues of Evaluated Technologies**

| | Extended Aeration Oxidation Ditches | Conventional Plug Flow for Advanced Nutrient Removal | Membrane Bioreactors | Integrated Fixed Film Activated Sludge | Moving Bed Bioreactors | Sequencing Batch Reactors |
|---|---|---|---|---|---|---|
| Well-stabilized sludge, less biosolids production. | Yes | Yes | Yes | Yes | Yes | Yes |
| Advanced biological nutrient removal capability. | Limited | Yes | Yes | Yes | Yes | Limited |
| Footprint. | Large | Large | Small | Retrofit | Retrofit | Small |
| Equipment intensive. | No | Yes | Yes | Yes | Yes | Yes |
| Influent equalization required? | No | Preferred | Yes | No | No | Preferred |
| Established design and operating parameters. | Yes | Yes | Yes | No | No | Yes |
| Process flexibility for nutrient removal. | Limited | Yes | Yes | Limited | Limited | Yes (but limited to time only) |
| Performance and design well characterized and predictable. | Yes | Yes | Yes | No | No | Yes |
| Requires secondary clarification. | Yes | Yes | No | No | No | No |
| May require tertiary filtration. | Yes | Yes | No | Yes | Yes | Yes |
| Operation intensive (includes activated sludge process and secondary clarifiers). | Yes | Yes | Yes | Yes | Yes | Yes |
| Maintenance intensive. | No | No | Yes | Yes | Yes | No |
| Aeration energy requirements. | Average | Low | High | High | High | High |
| Resistant to load fluctuations. | Yes | Limited | Yes | Yes | Yes | Limited |
| Performance sensitive to pretreatment processes. | No | No | Yes | Yes | Yes | No |
| High level of automation required. | No | No | Yes | No | No | Yes |
| Excessive foam accumulation. | Seasonal | Seasonal | Yes / No (depends on membrane type) | Yes | Yes | Seasonal |
| Stable low temperature nitrification. | No | No | Yes | Yes | Yes | No |

## 11. Opinion of Probable Capital and Operating Costs

The capital required to construct a project will depend on several factors, including redundancy in equipment, process flexibility, the number of buildings, architectural design, and owner preference. Additionally, the type of NPDES permit limit will often drive the decision to implement one or more process reliability options, which will influence capital costs. Therefore, a range of cost per gallon cost values for different treatment technologies will reflect the range of decisions that may occur during the design process.

Figure 12-1 presents capital costs for different treatment technologies for facilities of varying sizes: 16 mgd, 6 to 8 mgd, and 2 to 4 mgd. A few technologies that are applicable to a treatment facility retrofit, such as a 16 mgd retrofit to advanced BNR and IFAS, are also provided. The size of the facility is important, as larger facilities typically have the advantage of an economy of scale, e.g., a lower cost per gallon of flow treated as compared to smaller facilities. This phenomenon has been verified with bid prices for treatment facilities of varying size.

Figure 12-2 provides a range of power costs in kW•hr/million gallons treated. The design of a facility will heavily influence operating costs; however, under-loaded facilities will cost more to operate than facilities that are loaded near the design point regardless of the treatment technology that is selected. Many facilities with certain technologies, particularly membrane bioreactors, can be fairly new construction and therefore are not loaded near their design points. Additionally, in today's environment, many equipment suppliers are becoming more aware of the effect of operating cost on selecting technology and equipment. Manufacturers have continued to work towards introducing new energy efficient processes and technologies in addition to retrofitting older technologies.

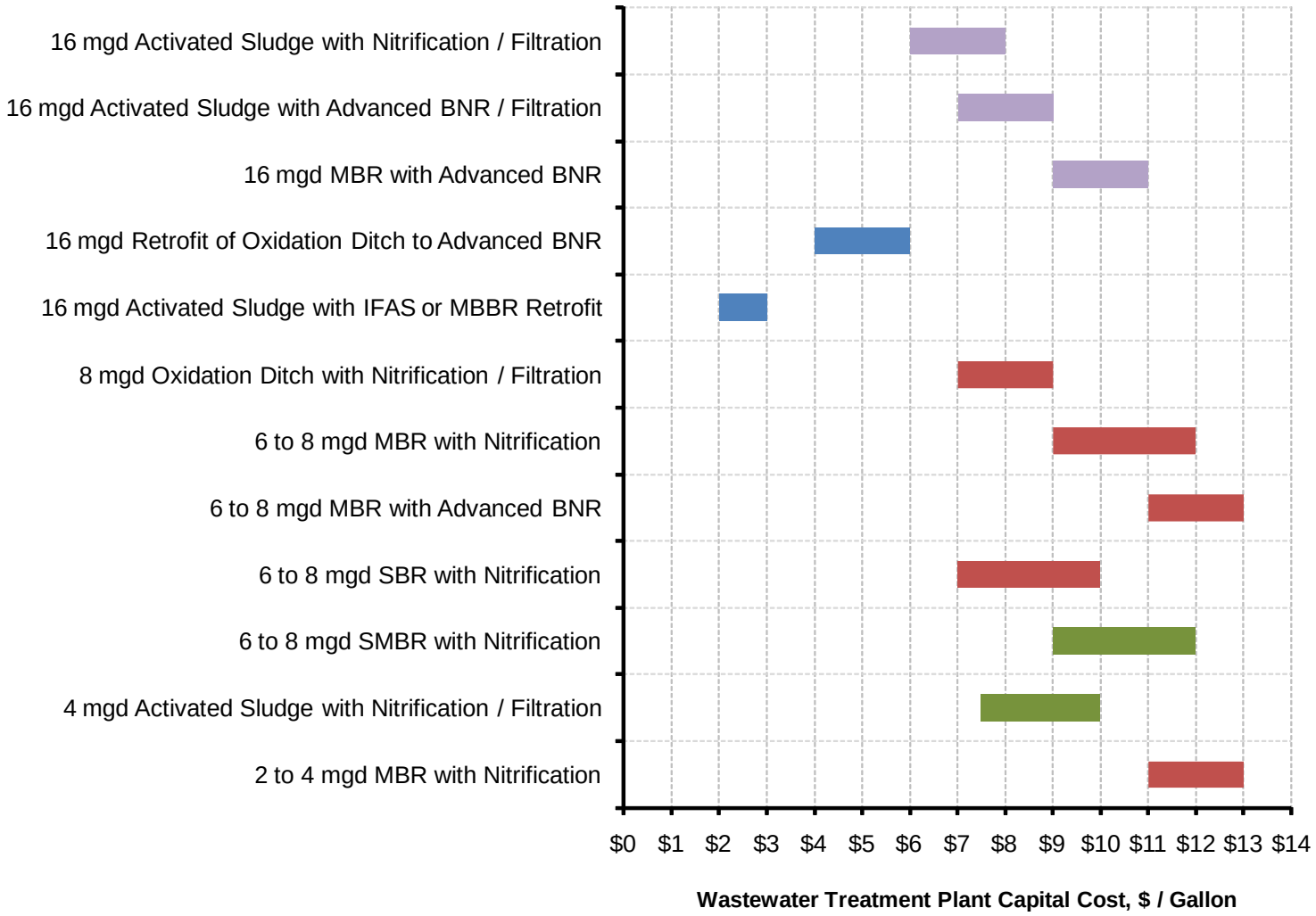


**Figure 12-1: Opinion of Probable Construction Cost ($/gal) for Wastewater Treatment Technologies in Varying Size Ranges**

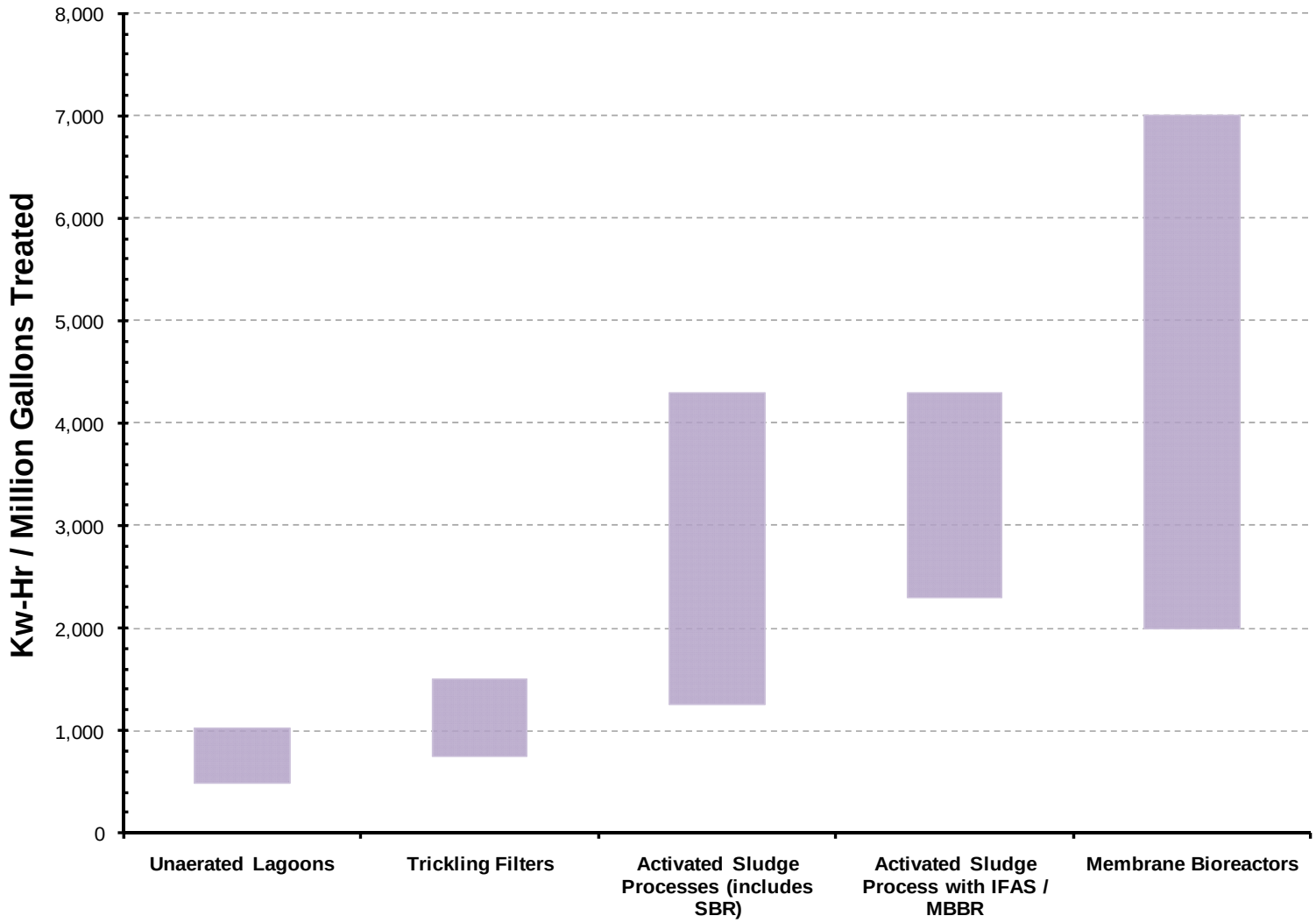


**Figure 12-2: Estimate of Facility Power Cost per Million Gallons Treated for Wastewater Treatment Technologies**

## 12. References

CDM, Hazen and Sawyer, May 2006. T.Z. Osborne and North Buffalo Water Reclamation Facilities Nutrient Removal Additions Project. Draft Wastewater Alternatives Technical Memorandum. City of Greensboro, North Carolina.

Grady, C. P. Leslie, Daigger, Glen T., Lim, Henry C., 1999. Biological Wastewater Treatment, Second Edition, Revised and Expanded.

Hazen and Sawyer. October 2010. Personal Communication with Dr. Ben Stanford, Director of Applied Research.

Hazen and Sawyer. October 2010. Personal Communication with Dr. Paul Pitt, P.E., Vice President, expert in all aspects of activated sludge, with emphasis on BNR/ENR upgrades, process modeling, operational troubleshooting, and solutions to activated sludge filamentous bulking and foaming problems.

Hazen and Sawyer. October 2010. Personal Communication with Tim Groninger, P.E., Associate, expert on long-term CSO Control Planning.

Hazen and Sawyer. October 2010. Personal Communication with Tony Greiner, Senior Associate, on the Draft Water Environment Federation Membrane Manual of Practice.

Metcalf & Eddy, Inc., 2003. Wastewater Engineering Treatment and Reuse, Fourth Edition.

National Biosolids Partnership. January 2005. National Manual of Good Practice for Biosolids.

U.S. Department of the Interior Bureau of Reclamation Technical Service Center Denver, Colorado, April 2004. Optimization of Various MBR Systems for Water Reclamation—Phase III. The City of San Diego Water Department Montgomery Watson Harza, Agreement No. 01-FC-81-0736. Desalination and Water Purification Research and Development Report No. 103.

U.S. Environmental Protection Agency, September 1992. Evaluation of Oxidation Ditches for Nutrient Removal. Office of Wastewater Enforcement and Compliance, Washington, D.C. 832R92003.

Water Environment Research Foundation, 2000. Investigation of Hybrid Systems for Enhanced Nutrient Control. Final Report. Project 96-CTS-4.